xcite LED Lighting
Data Sheet

Order Code: XCBD11NWM3

11W - Decorative Weatherproof IP65 Bulkhead with Opal Diffuser - 3hrs Maintained Emergency - 4000K



Features

- Ideal for retrofit of existing 2D fixtures
- Suitable for exterior use, outdoor or walkways
- Choice of plain or eyelid optic
- Up to 109 lumens per watt efficacy

Construction

- Polycarbonate body
- Opal diffuser
- Integral emergency option available
- Supplied as standard with neutral white [4000K] LED

4000K | 50,000 HOURS | 3YRS WARRANTY | IP65 | IK10 | M3

Technical Data

General

Luminaire Wattage (W)	11
Weight (kg)	0.76
Operating Temperature (ta °C)	5 to 25

Light Output

Lumens (lm)	1200
Efficacy (lm/W)	109

LED

CCT (K)	4000
CRI	80
Macadam Elipses	4

Emergency

Emergency Lumen Operating	218
Emergency Wattage (W)	3

Electrical

Rated Input Current (A)	0.14
Power Factor (pf)	0.9
Input Voltage Range (VAC)	220-240
Inrush Current Peak (A)	24.4
Surge Protection (kV)	0.5
Conductor Size (mm)	2.5
Terminal Type	4 pole piano key

Technical
Stafford Park 12
Telford, Shropshire,
TF3 3BJ

T: +44 (0)1952 292441
E: sales@xciteledlighting.co.uk
W: www.xciteledlighting.co.uk

xcite LED Lighting
Data Sheet

Order Code: XCBD11NWM3

11W - Decorative Weatherproof IP65 Bulkhead with Opal Diffuser - 3hrs Maintained Emergency - 4000K

Dimensions

Height (mm)	60
Dia. (mm)	275

Line Drawing

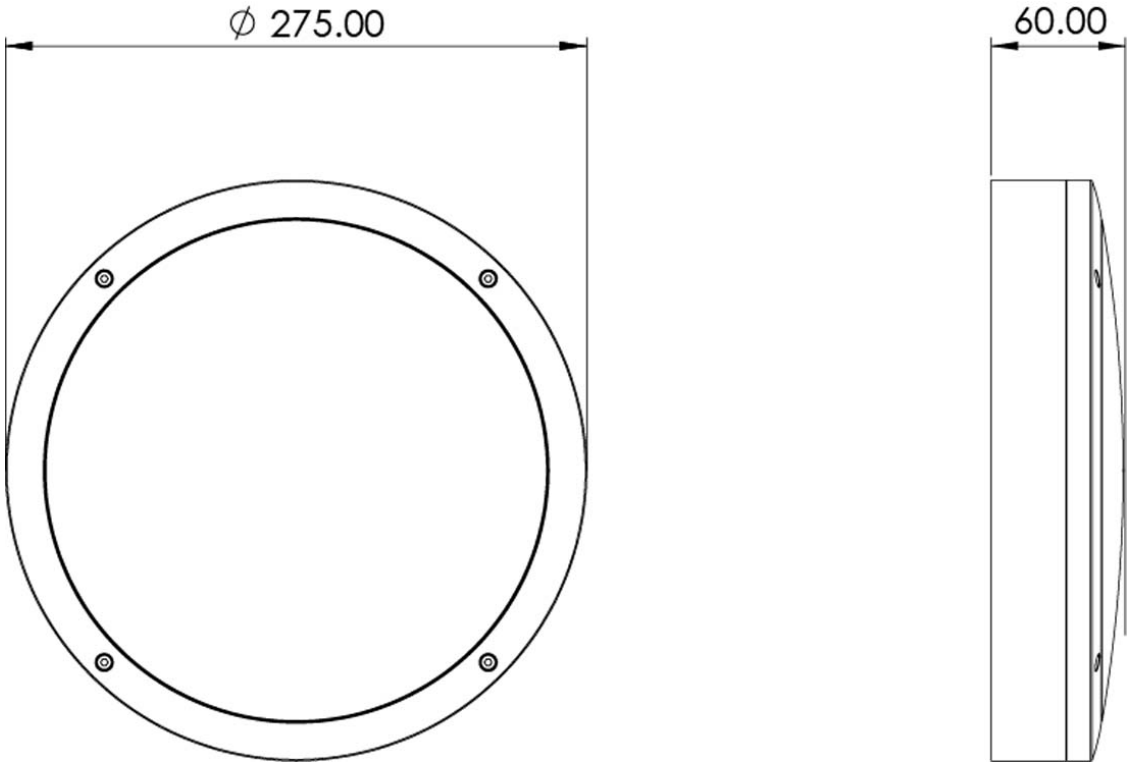

Technical
Stafford Park 12
Telford, Shropshire,
TF3 3BJ

T: +44 (0)1952 292441
E: sales@xciteledlighting.co.uk
W: www.xciteledlighting.co.uk