xcite LED Lighting
Data Sheet

Order Code: XCBHC6

6W - Bulkhead Wall Light with Opal Polycarbonate Diffuser - IP65 - 6000K - Black



Features

- Suitable for exterior walls and entrance areas
- Photocell option available
- Up to 67 lumens per watt efficacy

Construction

- High quality polycarbonate construction
- Black polycarbonate body
- Shallow profile diffuser
- Opal polycarbonate diffuser
- Supplied with daylight [6000K]



Technical Data

General

Luminaire Wattage (W)	6
Weight (kg)	0.37
Operating Temperature (ta °C)	0 to 25

Light Output

Lumens (lm)	400
Efficacy (lm/W)	67

LED

CCT (K)	6000
CRI	80
Macadam Elipses	4

Electrical

Rated Input Current (A)	0.05
Power Factor (pf)	0.5
Input Voltage Range (VAC)	220-240
Inrush Current Peak (A)	25
Surge Protection (kV)	1
Conductor Size (mm)	2.5
Terminal Type	3 pole piano key

Technical
Stafford Park 12
Telford, Shropshire,
TF3 3BJ

T: +44 (0)1952 292441
E: sales@xciteledlighting.co.uk
W: www.xciteledlighting.co.uk

xcite LED Lighting

Data Sheet

Order Code: XCBHC6

6W - Bulkhead Wall Light with Opal Polycarbonate Diffuser - IP65 - 6000K - Black

Dimensions

Length (mm)	245
Width (mm)	125
Depth (mm)	97

Line Drawing

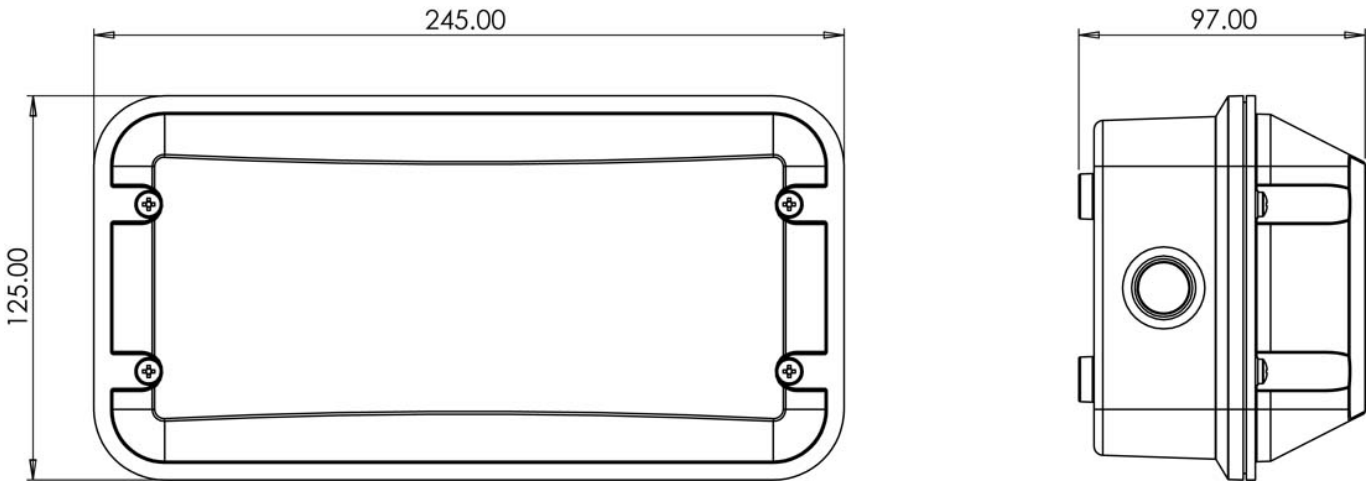

Technical
Stafford Park 12
Telford, Shropshire,
TF3 3BJ

T: +44 (0)1952 292441
E: sales@xciteledlighting.co.uk
W: www.xciteledlighting.co.uk