xcite LED Lighting
Data Sheet

Order Code: XCBHSBOX1

X1 Bulkhead WP - Square - Opal diffuser - CCT [3000K/4000K/6000K] + Wattage Selectable - Black



Features

- Suitable for exterior commercial and industrial applications
- CCT selectable via selector switch [3000K/4000K/6000K]
- Wattage selectable via selector switch [8W/12W/16W]

Construction

- Modular emergency and microwave sensor's available for quick and easy conversion of a standard fitting
- For additional control, please use X1 Bulkhead Remote [Sold Separately]

Installation Notes

4-point screw fixing
Conduit side entry points for surface mount cable entry
Loop-in, loop-out push-fit terminal block for quick tool-free instalation

Technical Data

General

Luminaire Wattage (W)	8W/12W/16W
Weight (kg)	0.71
Operating Temperature (ta °C)	0° to 25°

Light Output

Lumens (lm)	1100 to 2000
Efficacy (lm/W)	141

LED

CCT (K)	3000K/4000K/6000K
CRI	80
Macadam Elipses	1.0 to 1.6

Driver

Driver Current (mA)	140/215/280
Forward Voltage (V)	48.5 to 52.5

Electrical

Rated Input Current (A)	0.04 to 0.07
Power Factor (pf)	0.83 to 0.92
Input Voltage Range (VAC)	198 to 264
Inrush Current Peak (A)	18.4
Surge Protection (kV)	1
Conductor Size (mm)	0.5 to 2.5
Terminal Type	4 pole piano key

Technical
Stafford Park 12
Telford, Shropshire,
TF3 3BJ

T: +44 (0)1952 292441
E: sales@xciteledlighting.co.uk
W: www.xciteledlighting.co.uk

xcite LED Lighting

Data Sheet

Order Code: XCBHSBOX1

X1 Bulkhead WP - Square - Opal diffuser - CCT [3000K/4000K/6000K] + Wattage Selectable - Black

Dimensions

Length (mm)	250
Width (mm)	250
Depth (mm)	95

Line Drawing

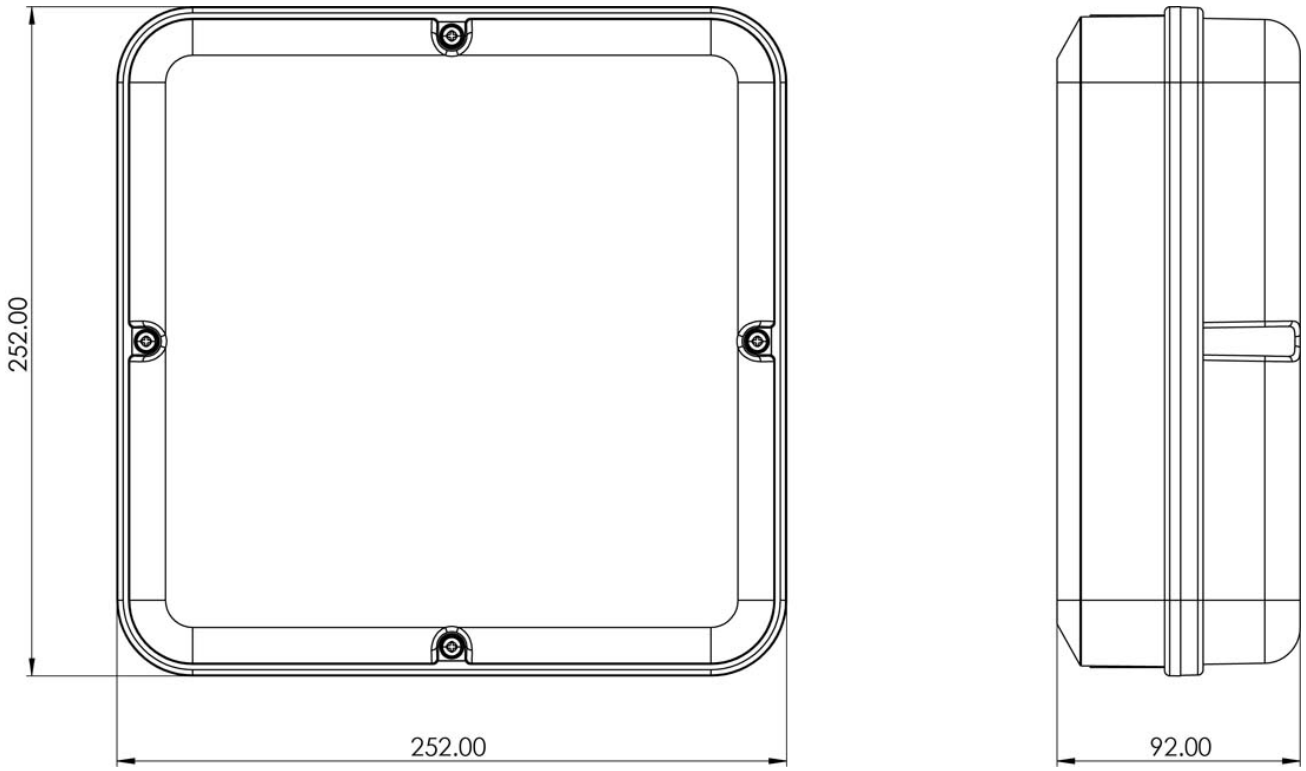

Technical
Stafford Park 12
Telford, Shropshire,
TF3 3BJ

T: +44 (0)1952 292441
E: sales@xciteledlighting.co.uk
W: www.xciteledlighting.co.uk