xcite LED Lighting
Data Sheet

Order Code: XCBLAM3STEU3

XCITE BLADE ST XCBLA 2W - 6500K - Fixed output - Emergency Self-test



Features

- Ideal for retrofit of existing emergency fixtures
- Suitable for ceiling, wall or surface fixings
- 20mm conduit rear cable entries
- Supplied with flag pole mounting kit
- Multi purpose LED emergency drop light
- Supplied with LiFePO4 battery
- Optional Recessed Bezel available [sold separately]

Construction

- Operates in maintained and non-maintained mode
- Supplied with EURO 4 running man legend
- Integral auto self-test for reduced maintenance, includes a disable function

6500K | 50,000 HOURS | 3YRS WARRANTY | IP20 | IK06 | M3 | LiFePO4

Technical Data

General

Luminaire Wattage (W)	2
Weight (kg)	0.79
Operating Temperature (ta °C)	5° to 25°

Driver

Driver Current (mA)	135
Forward Voltage (V)	2.64

Electrical

Rated Input Current (A)	0.04
Power Factor (pf)	0.2
Input Voltage Range (VAC)	220 to 240
Conductor Size (mm)	1.5
Terminal Type	4 pole screw down

Technical
Stafford Park 12
Telford, Shropshire,
TF3 3BJ

T: +44 (0)1952 292441
E: sales@xciteledlighting.co.uk
W: www.xciteledlighting.co.uk

xcite LED Lighting

Data Sheet

Order Code: XCBLAM3STEU3

XCITE BLADE ST XCBLA 2W - 6500K - Fixed output - Emergency Self-test

Dimensions

Length (mm)	344
Width (mm)	42
Depth (mm)	237

Line Drawing

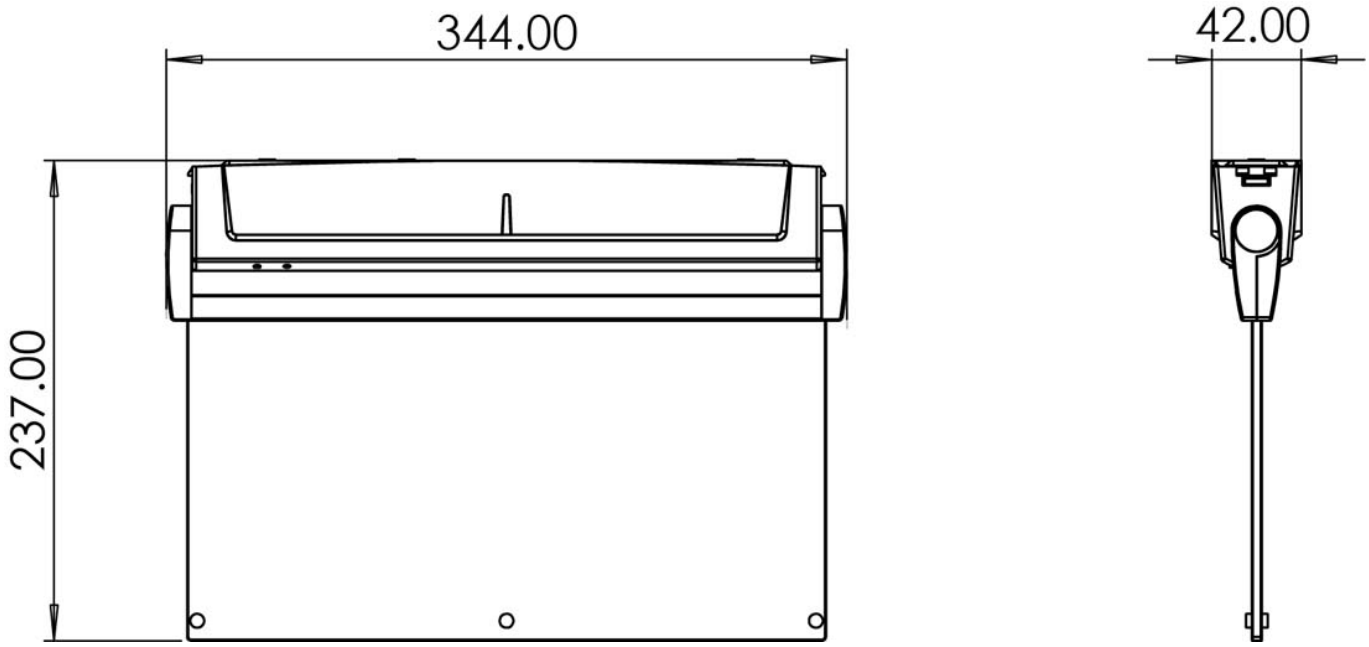

Technical
Stafford Park 12
Telford, Shropshire,
TF3 3BJ

T: +44 (0)1952 292441
E: sales@xciteledlighting.co.uk
W: www.xciteledlighting.co.uk