xcite LED Lighting
Data Sheet

Order Code: XCBLC18CTD

18W - Downlight BL CC - CCTK Selector [3000K/4000K/6000K]- Dimmable



Features

- Suitable for general domestic and commercial use
- CCT selectable via selector switch [3000K/4000K/6000K]
- Available in 6 sizes
- Available in 6 different outputs
- Phase cut dimming option available
- 3 hours emergency maintained with compatible conversion box Emergency Kit
- Up to 111 lumens per watt efficacy

Construction

- Frosted polycarbonate diffuser

3000K 4000K 6000K | 50,000 HOURS | 3YRS WARRANTY | IP20 | IK04 | DIMMABLE

Technical Data

General

Luminaire Wattage (W)	18
Weight (kg)	0.31
Operating Temperature (ta °C)	0 to 25

Light Output

Lumens (lm)	2000
Efficacy (lm/W)	111

LED

CCT (K)	3000K/4000K/6000K
CRI	80
Macadam Elipses	4

Driver

Driver Current (mA)	450
Forward Voltage (V)	27-42

Electrical

Rated Input Current (A)	0.9
Power Factor (pf)	0.96
Input Voltage Range (VAC)	198-264
Inrush Current Peak (A)	2.04
Surge Protection (kV)	1
Conductor Size (mm)	0.75 - 1.5 mm²
Terminal Type	PUSH BUTTON 2

Technical
Stafford Park 12
Telford, Shropshire,
TF3 3BJ

T: +44 (0)1952 292441
E: sales@xciteledlighting.co.uk
W: www.xciteledlighting.co.uk

xcite LED Lighting

Data Sheet

Order Code: XCBLC18CTD

18W - Downlight BL CC - CCTK Selector [3000K/4000K/6000K]- Dimmable

Dimensions

Depth (mm)	26
Cut Out (mm)	220
Dia. (mm)	240

Line Drawing

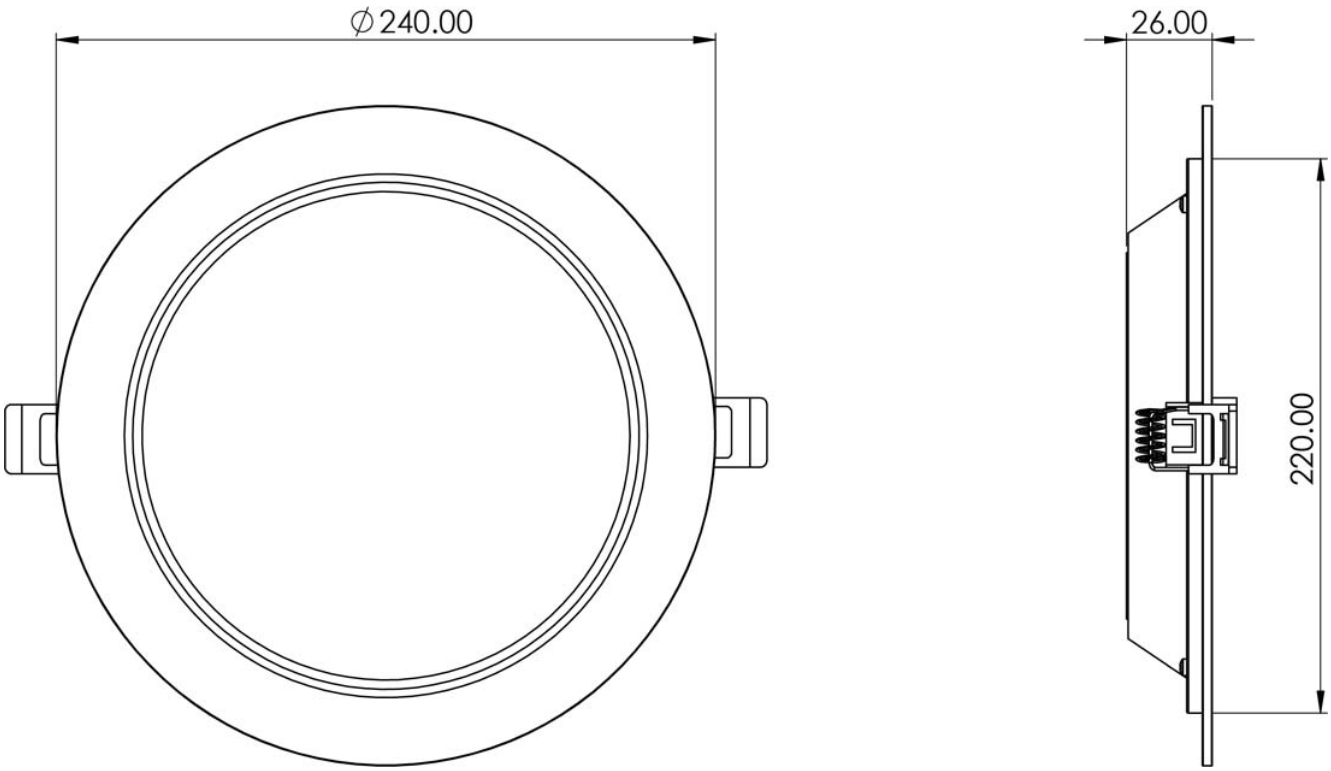

Technical
Stafford Park 12
Telford, Shropshire,
TF3 3BJ

T: +44 (0)1952 292441
E: sales@xciteledlighting.co.uk
W: www.xciteledlighting.co.uk