xcite LED Lighting
Data Sheet

Order Code: XCBTS3



Features

- 3 hours non-maintained emergency batten fit conversion pack
- Supplied with 4-way push-fit terminal block for quick installation

Construction

- Universal batten fit emergency kit to suit 20mm knock out

Installation Notes

Wired Via 2-pole terminal connection inside main body

50,000 HOURS | IP20 | NM3

Technical Data

General

Luminaire Wattage (W)	1

Light Output

Lumens (lm)	120

Electrical

Input Voltage Range (VAC)	220 to 240
Terminal Type	4 pole piano key

Technical
Stafford Park 12
Telford, Shropshire,
TF3 3BJ

T: +44 (0)1952 292441
E: sales@xciteledlighting.co.uk
W: www.xciteledlighting.co.uk

xcite LED Lighting

Data Sheet

Order Code: XCBTS3

Dimensions

Length (mm)	160
Width (mm)	60
Depth (mm)	41

Line Drawing

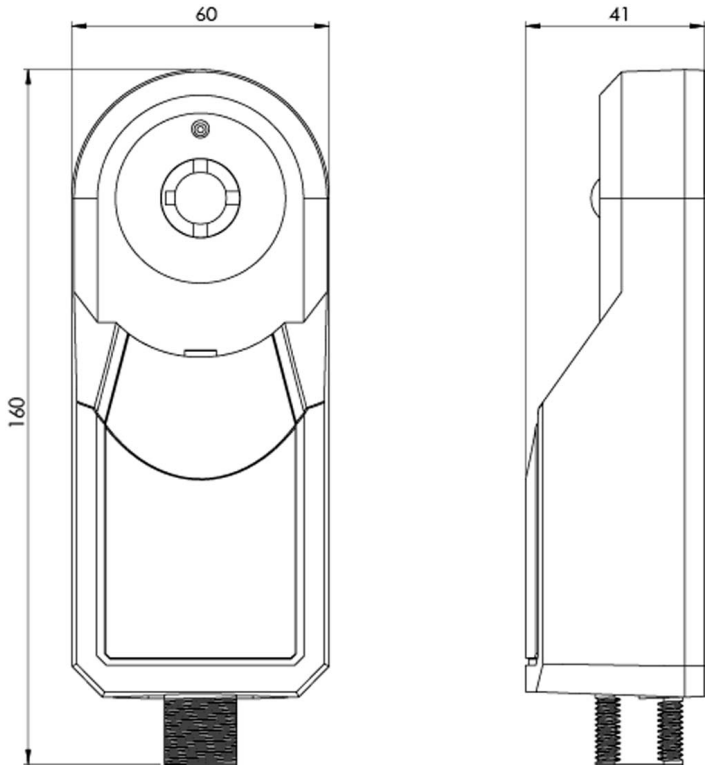

Technical
Stafford Park 12
Telford, Shropshire,
TF3 3BJ

T: +44 (0)1952 292441
E: sales@xciteledlighting.co.uk
W: www.xciteledlighting.co.uk