xcite LED Lighting
Data Sheet

Order Code: XCBZX1PB

Polished Brass Bezel for X1 FRD

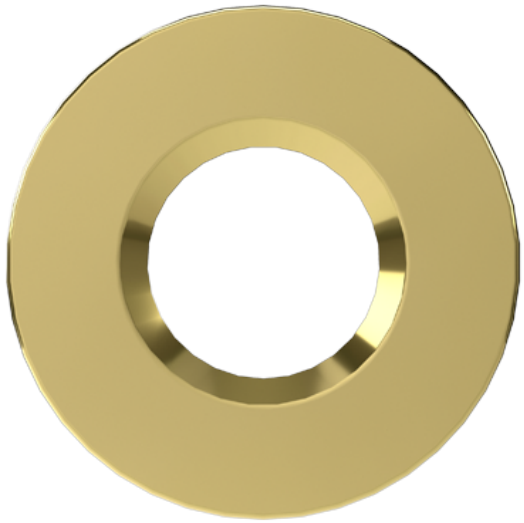

Features

- Compatible with X1 FRD

Construction

- Pressed steel bezel

Dimensions

Length (mm)	85
Width (mm)	85
Depth (mm)	5

Line Drawing

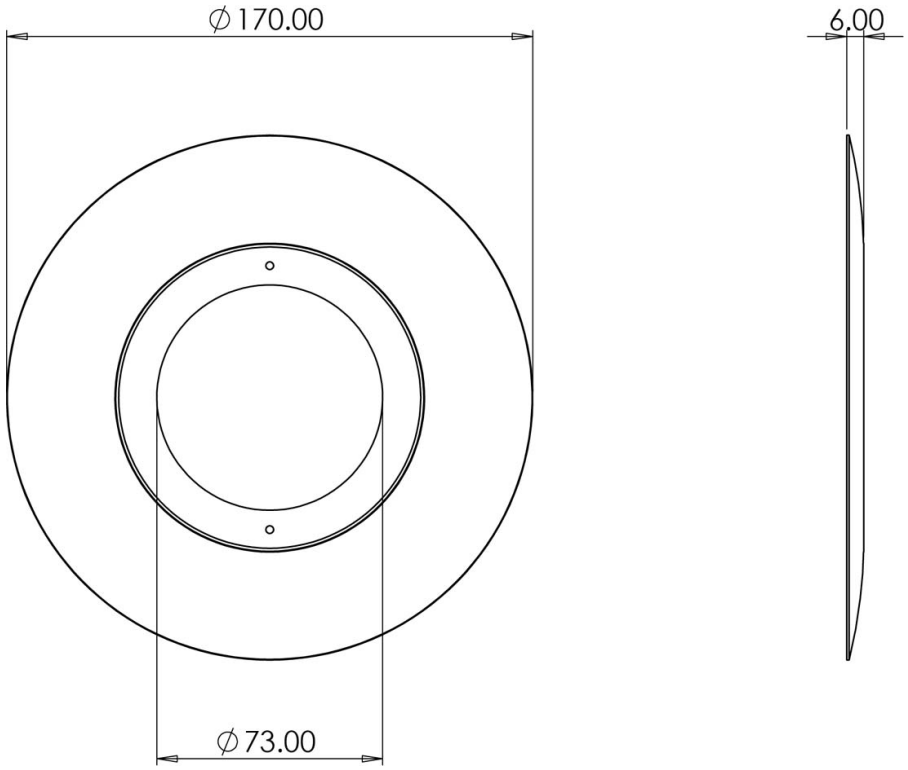

Technical
Stafford Park 12
Telford, Shropshire,
TF3 3BJ

T: +44 (0)1952 292441
E: sales@xciteledlighting.co.uk
W: www.xciteledlighting.co.uk