xcite LED Lighting
Data Sheet

Order Code: XCDLAM3ST

XCITE DROP LIGHT ST XCDLA 2W - 6500K - Fixed output - Emergency Self-test



Features

- Ideal for retrofit of existing emergency fixtures
- Suitable for escape routes and exits
- Reduced maintenance and high performance
- Supplied with LiFePO4 battery

Construction

- Surface box with suspended legend
- Polycarbonate body
- Operates in maintained and non-maintained mode
- Wire suspension [0 - 750mm]
- Supplied with EURO 4 running man legend
- Integral auto self-test for reduced maintenance, includes a disable function

6500K | 50,000 HOURS | 3YRS WARRANTY | IP20 | IK06 | M3 | LiFePO4

Technical Data

General

Luminaire Wattage (W)	2
Weight (kg)	0.64
Operating Temperature (ta °C)	5° to 25°

Driver

Driver Current (mA)	110
Forward Voltage (V)	2.68

Electrical

Rated Input Current (A)	0.05
Power Factor (pf)	0.19
Input Voltage Range (VAC)	220 to 240
Conductor Size (mm)	1.5
Terminal Type	4 pole screw down

Technical
Stafford Park 12
Telford, Shropshire,
TF3 3BJ

T: +44 (0)1952 292441
E: sales@xciteledlighting.co.uk
W: www.xciteledlighting.co.uk

xcite LED Lighting

Data Sheet

Order Code: XCDLAM3ST

XCITE DROP LIGHT ST XCDLA 2W - 6500K - Fixed output - Emergency Self-test

Dimensions

Length (mm)	340
Width (mm)	45
Depth (mm)	1000

Line Drawing

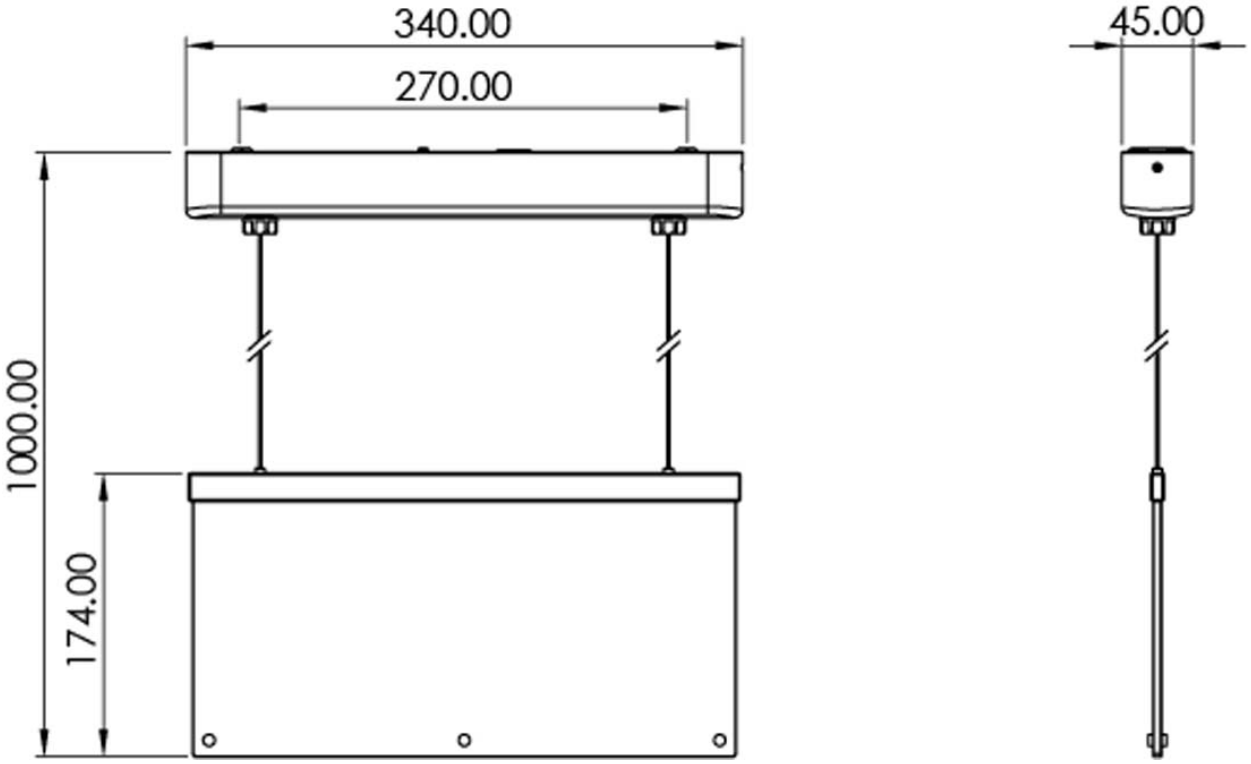

Technical
Stafford Park 12
Telford, Shropshire,
TF3 3BJ

T: +44 (0)1952 292441
E: sales@xciteledlighting.co.uk
W: www.xciteledlighting.co.uk