xcite LED Lighting
Data Sheet

Order Code: XCDLUCT

10-16W - Universal Downlight - CCTK Selector [3000K/4000K/6000K] - White

Features

- Universal downlight for retrofitting into wide range of cut-outs
- Adjustable bracket allows retrofitting into existing cut-out of 65mm to 205mm
- CCT selectable via selector switch [3000K/4000K/6000K]
- A choice of wattages selectable via switch [10W, 13W, 16W]
- Ideal solution when cut-out and colour temperature requirements are not known
- Up to 90 lumens per watt efficacy

Construction

- Polycarbonate body
- Opal polystyrene diffuser
- Integral driver

3000K 4000K 6000K | 50,000 HOURS | 3YRS WARRANTY | IP40 | IK06

Technical Data

General

Luminaire Wattage (W)	Oct-16
Weight (kg)	0.36

Light Output

Lumens (lm)	900 to 1500
Efficacy (lm/W)	90

LED

CCT (K)	3000K/4000K/6000K

Driver

Driver Current (mA)	210
Forward Voltage (V)	65 to 78

Electrical

Rated Input Current (A)	0.18
Power Factor (pf)	0.9
Input Voltage Range (VAC)	85-65
Inrush Current Peak (A)	6.8
Surge Protection (kV)	0.5

Technical
Stafford Park 12
Telford, Shropshire,
TF3 3BJ

T: +44 (0)1952 292441
E: sales@xciteledlighting.co.uk
W: www.xciteledlighting.co.uk

xcite LED Lighting
Data Sheet

Order Code: XCDLUCT

10-16W - Universal Downlight - CCTK Selector [3000K/4000K/6000K] - White

Dimensions

Height (mm)	17
Cut Out (mm)	65 to 205
Dia. (mm)	235

Line Drawing

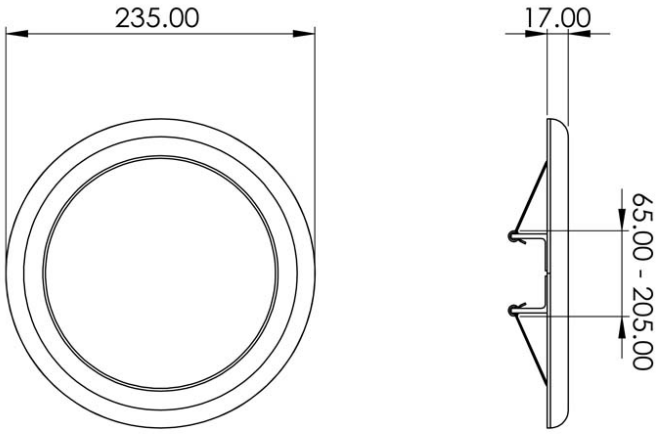

Technical
Stafford Park 12
Telford, Shropshire,
TF3 3BJ

T: +44 (0)1952 292441
E: sales@xciteledlighting.co.uk
W: www.xciteledlighting.co.uk