xcite LED Lighting
Data Sheet

Order Code: XCDLWP5CTD

XCITE DOWNLIGHT WP CCT - 5W - 3000K-6000K - Dimmable



Features



Technical Data

General

Luminaire Wattage (W)	5
Weight (kg)	0.23
Operating Temperature (ta °C)	0°C to 25°C

Light Output

Lumens (lm)	450 to 530
Efficacy (lm/W)	101

LED

CRI	80
Macadam Elipses	1.6 to 9.9

Driver

Driver Current (mA)	14
Forward Voltage (V)	260

Electrical

Rated Input Current (A)	0.025
Power Factor (pf)	0.9
Input Voltage Range (VAC)	220 to 240
Inrush Current Peak (A)	120
Surge Protection (kV)	1.5
Conductor Size (mm)	0.75

Technical
Stafford Park 12
Telford, Shropshire,
TF3 3BJ

T: +44 (0)1952 292441
E: sales@xciteledlighting.co.uk
W: www.xciteledlighting.co.uk

Order Code: XCDLWP5CTD

XCITE DOWNLIGHT WP CCT - 5W - 3000K-6000K - Dimmable

Dimensions

Height (mm)	46
Cut Out (mm)	66
Dia. (mm)	91

Line Drawing

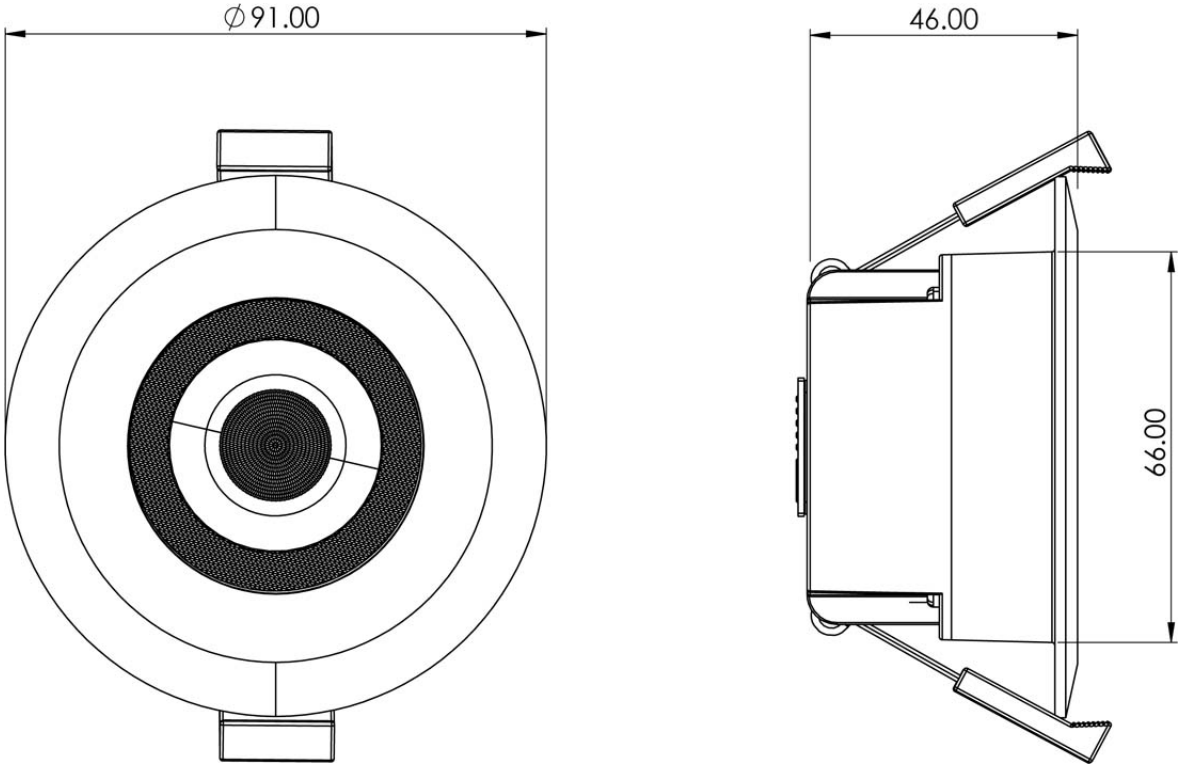

Technical
Stafford Park 12
Telford, Shropshire,
TF3 3BJ

T: +44 (0)1952 292441
E: sales@xciteledlighting.co.uk
W: www.xciteledlighting.co.uk