xcite LED Lighting
Data Sheet

Order Code: XCDLWP5WWG

5W - Downlight WP - 3000K - Anthracite Grey



Features

- Suitable for exterior canopy areas and soffits
- Available in white, black or anthracite grey trim finish
- Phase cut dimming as standard

Construction

- IP65 rated from above and below, with sealed pre-wired lead [1.5M]
- Die-cast aluminium body with integral driver
- Robust construction with corrosion resistant marine grade paint
- Available in warm white [3000K] or neutral white [4000K]

Technical Data

General

Luminaire Wattage (W)	5
Weight (kg)	0.16
Operating Temperature (ta °C)	-20 to 40

Light Output

Lumens (lm)	500
Efficacy (lm/W)	100

LED

CCT (K)	3000
CRI	80
Macadam Elipses	5

Driver

Driver Current (mA)	25
Forward Voltage (V)	220-240

Electrical

Rated Input Current (A)	0.025
Power Factor (pf)	0.9
Input Voltage Range (VAC)	220-240
Inrush Current Peak (A)	0.7
Surge Protection (kV)	1
Conductor Size (mm)	0.5 to 2.5
Terminal Type	2-pole screw down

Technical
Stafford Park 12
Telford, Shropshire,
TF3 3BJ

T: +44 (0)1952 292441
E: sales@xciteledlighting.co.uk
W: www.xciteledlighting.co.uk

xcite LED Lighting

Data Sheet

Order Code: XCDLWP5WWG

5W - Downlight WP - 3000K - Anthracite Grey

Dimensions

Depth (mm)	45
Cut Out (mm)	66
Dia. (mm)	90

Line Drawing

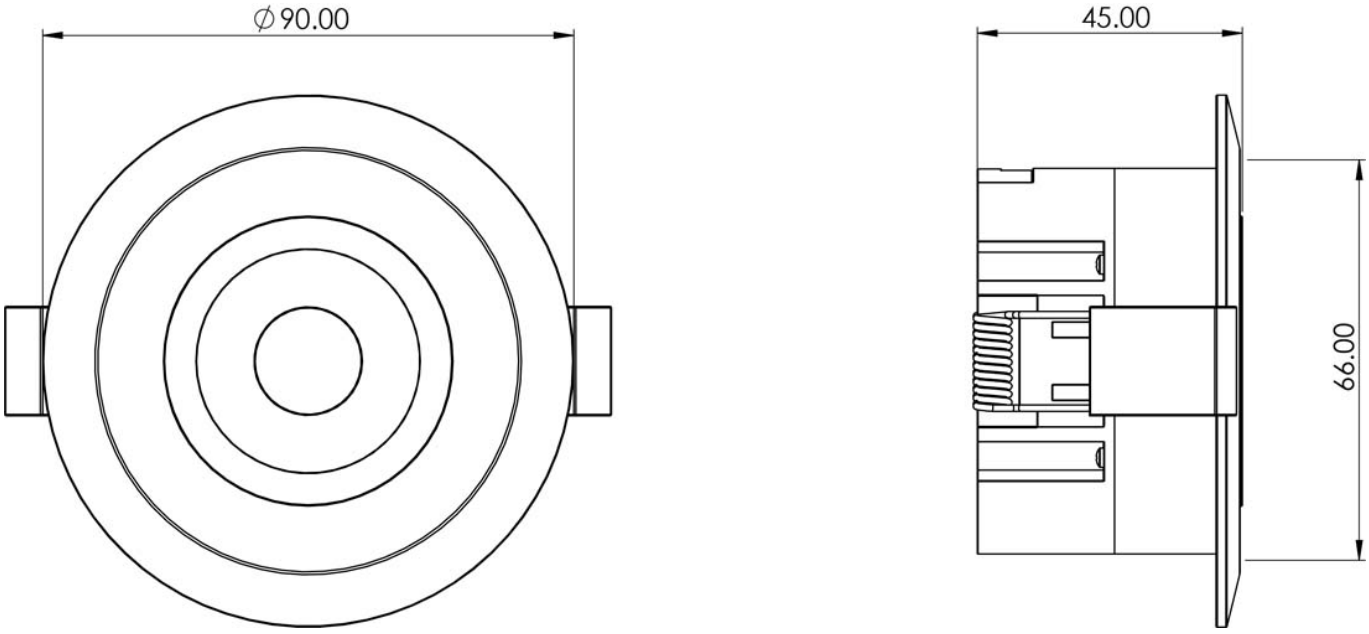

Technical
Stafford Park 12
Telford, Shropshire,
TF3 3BJ

T: +44 (0)1952 292441
E: sales@xciteledlighting.co.uk
W: www.xciteledlighting.co.uk