xcite LED Lighting
Data Sheet

Order Code: XCDR5

6W - Compact Bulkhead with Opal Diffuser - 4000K



Features

- Ideal for retrofit of existing GLS fixtures
- Suitable for bathrooms or storerooms
- Low energy LED module for reduced running costs
- Up to 83 lumens per watt efficacy

Construction

- Polycarbonate body
- High quality polycarbonate construction
- Opal diffuser
- Supplied as standard with neutral white [4000K] LED

Technical Data

General

Luminaire Wattage (W)	6
Weight (kg)	0.33
Operating Temperature (ta °C)	0 to 25

Light Output

Lumens (lm)	500
Efficacy (lm/W)	83

LED

CCT (K)	4000
CRI	80
Macadam Elipses	4

Driver

Driver Current (mA)	350
Forward Voltage (V)	11.2 to 13.6

Electrical

Rated Input Current (A)	0.048
Power Factor (pf)	0.5
Input Voltage Range (VAC)	220-240
Inrush Current Peak (A)	25
Surge Protection (kV)	1
Conductor Size (mm)	2.5
Terminal Type	3 pole piano key

Technical
Stafford Park 12
Telford, Shropshire,
TF3 3BJ

T: +44 (0)1952 292441
E: sales@xciteledlighting.co.uk
W: www.xciteledlighting.co.uk

xcite LED Lighting

Data Sheet

Order Code: XCDR5

6W - Compact Bulkhead with Opal Diffuser - 4000K

Dimensions

Height (mm)	69
Dia. (mm)	160

Line Drawing

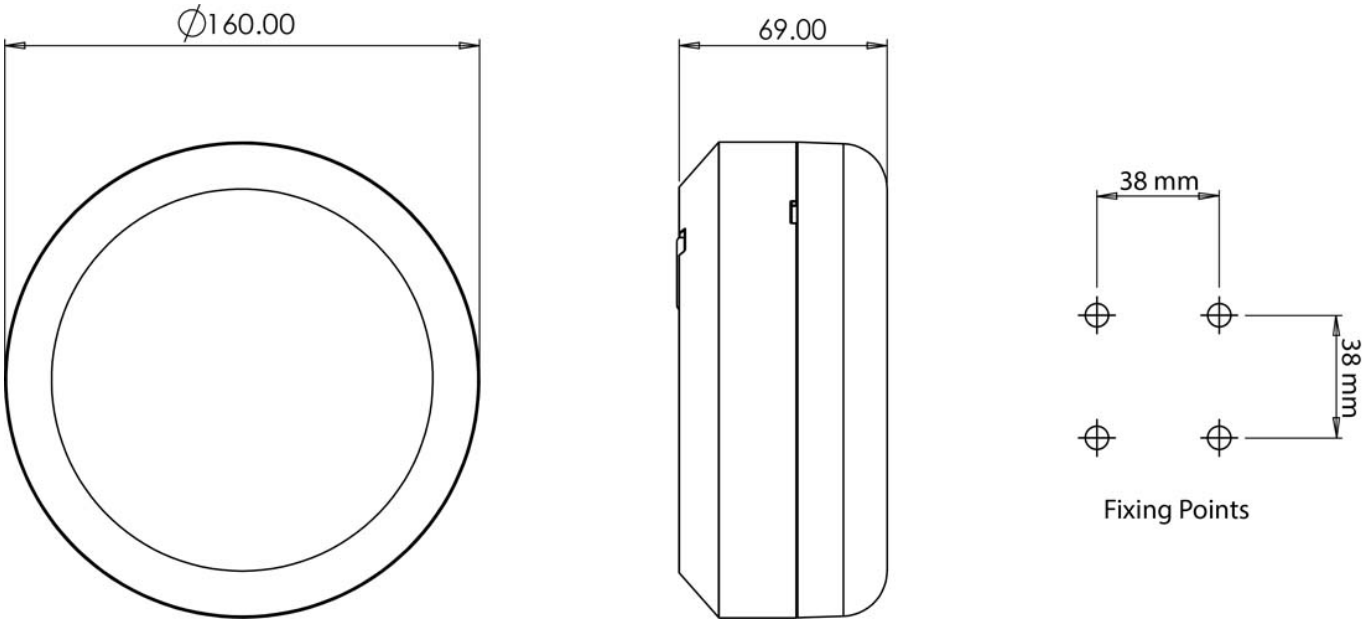

Technical
Stafford Park 12
Telford, Shropshire,
TF3 3BJ

T: +44 (0)1952 292441
E: sales@xciteledlighting.co.uk
W: www.xciteledlighting.co.uk