xcite LED Lighting
Data Sheet

Order Code: XCEDLA1NM3CST

XCITE EM DOWNLIGHT ST XCEDLA - 6500K - Fixed output - non-maintained Emergency Self-test Corridor optic



Features

- Suitable for open areas and escape routes
- Virtually service free emergency lighting
- Easy to install with simple connection wiring
- Supplied with LiFePO4 battery

Construction

- Polycarbonate body
- Very low energy consumption - 1W
- Separate high quality LED driver
- Operates in non-maintained mode
- Internal mains connection
- Integral auto self-test for reduced maintenance, includes a disable function

50,000 HOURS | 3YRS WARRANTY | IP20 | IK03 | LiFePO4

Technical Data

General

Luminaire Wattage (W)	1
Weight (kg)	0.37
Operating Temperature (ta °C)	5° to 25°

LED

CRI	70

Driver

Driver Current (mA)	350
Forward Voltage (V)	3.1

Emergency

Emergency Lumen Operating	140
Emergency Wattage (W)	1

Electrical

Rated Input Current (A)	0.03
Power Factor (pf)	0.04
Input Voltage Range (VAC)	220 to 240
Conductor Size (mm)	1.5
Terminal Type	3 pole screw down

Technical
Stafford Park 12
Telford, Shropshire,
TF3 3BJ

T: +44 (0)1952 292441
E: sales@xciteledlighting.co.uk
W: www.xciteledlighting.co.uk

Order Code: XCEDLA1NM3CST

XCITE EM DOWNLIGHT ST XCEDLA - 6500K - Fixed output - non-maintained Emergency Self-test Corridor optic

Dimensions

Height (mm)	57
Cut Out (mm)	50
Dia. (mm)	60

Line Drawing

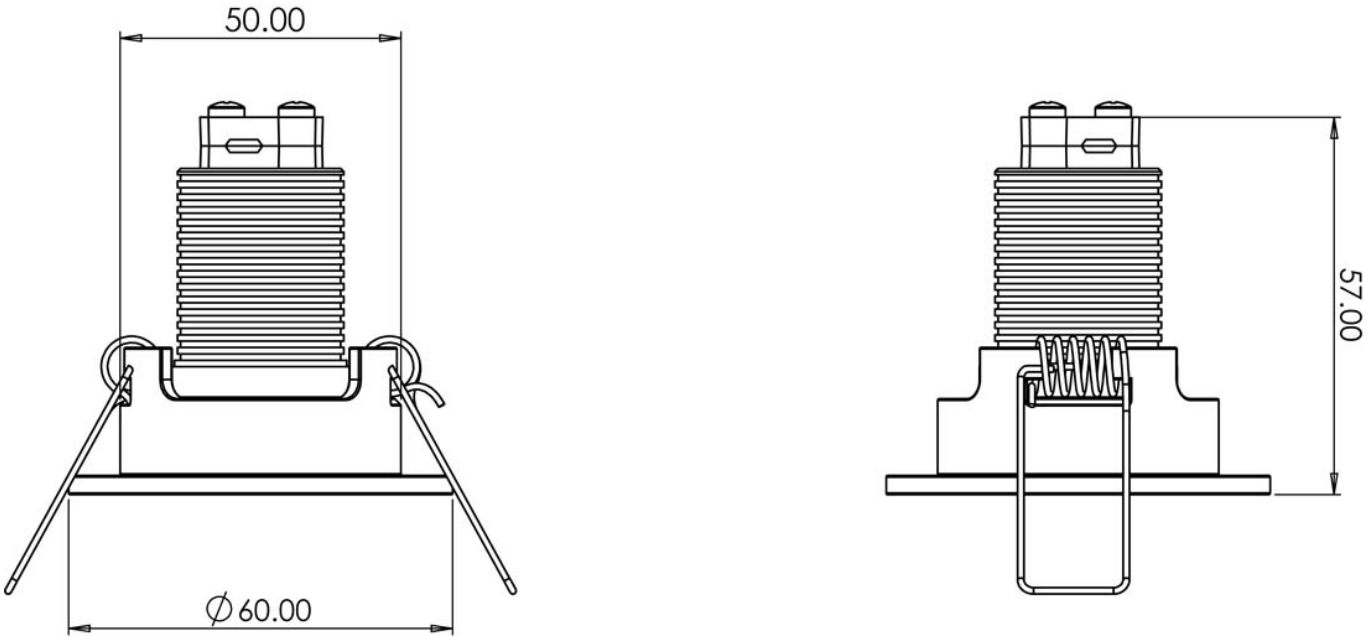

Technical
Stafford Park 12
Telford, Shropshire,
TF3 3BJ

T: +44 (0)1952 292441
E: sales@xciteledlighting.co.uk
W: www.xciteledlighting.co.uk