xcite LED Lighting
Data Sheet

Order Code: XCEXT2RB

2m Recessed Aluminium Profile - Black



Features

- Aluminium LED Strip profiles
- Supplied with simple fixing bracket and screws

Dimensions

Length (mm)	2000
Width (mm)	22
Depth (mm)	12

General

Operating Temperature (ta °C)	0 to 25

50,000 HOURS

IP20

Line Drawing

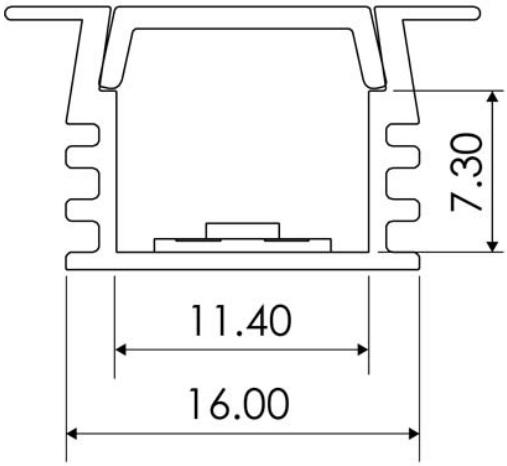

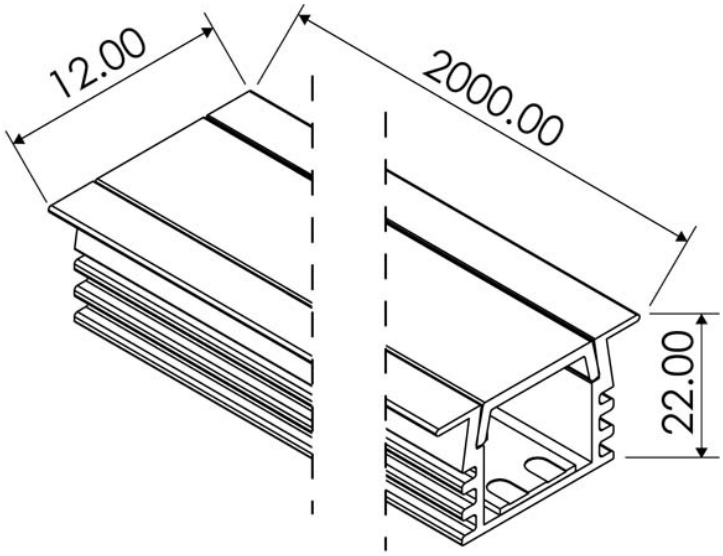

Technical
Stafford Park 12
Telford, Shropshire,
TF3 3BJ

T: +44 (0)1952 292441
E: sales@xciteledlighting.co.uk
W: www.xciteledlighting.co.uk

Generated on: 27/11/2026 1:47am
Produced by xcite LED Lighting