xcite LED Lighting
Data Sheet

Order Code: XCFC20CTMS

20W - Floodlight with Microwave Sensor - Photocell - CCTK Selector [3000K/4000K/6000K]



Features

- Ideal for retrofit of existing halogen fixtures, lighting buildings, car parks or doorways
- CCT selectable via selector switch [3000K/4000K/6000K]
- Available with high performance PIR
- Available in 4 different outputs
- Available with microwave sensor + photocell only function (via the remote, supplied as standard)
- High quality toughened safety glass
- Supplied with stirrup and 1m of flex for column, bracket or surface fix
- Up to 100 lumens per watt efficacy

Construction

- Die-cast aluminium body finished with black marine grade paint finish
- Weatherproof IP65 construction
- CRI: Ra>80

Technical Data

General

Luminaire Wattage (W)	20
Weight (kg)	0.83
Operating Temperature (ta °C)	-20 to 40

Light Output

Lumens (lm)	2000
Efficacy (lm/W)	100

LED

CCT (K)	3000K/4000K/6000K
CRI	>80
Macadam Elipses	<5

Electrical

Rated Input Current (A)	0.0882
Power Factor (pf)	0.9
Input Voltage Range (VAC)	220-240
Terminal Type	3 pole screw down

Technical
Stafford Park 12
Telford, Shropshire,
TF3 3BJ

T: +44 (0)1952 292441
E: sales@xciteledlighting.co.uk
W: www.xciteledlighting.co.uk

xcite LED Lighting

Data Sheet

Order Code: XCFC20CTMS

20W - Floodlight with Microwave Sensor - Photocell - CCTK Selector [3000K/4000K/6000K]

Dimensions

Length (mm)	208
Width (mm)	159
Depth (mm)	39

Line Drawing

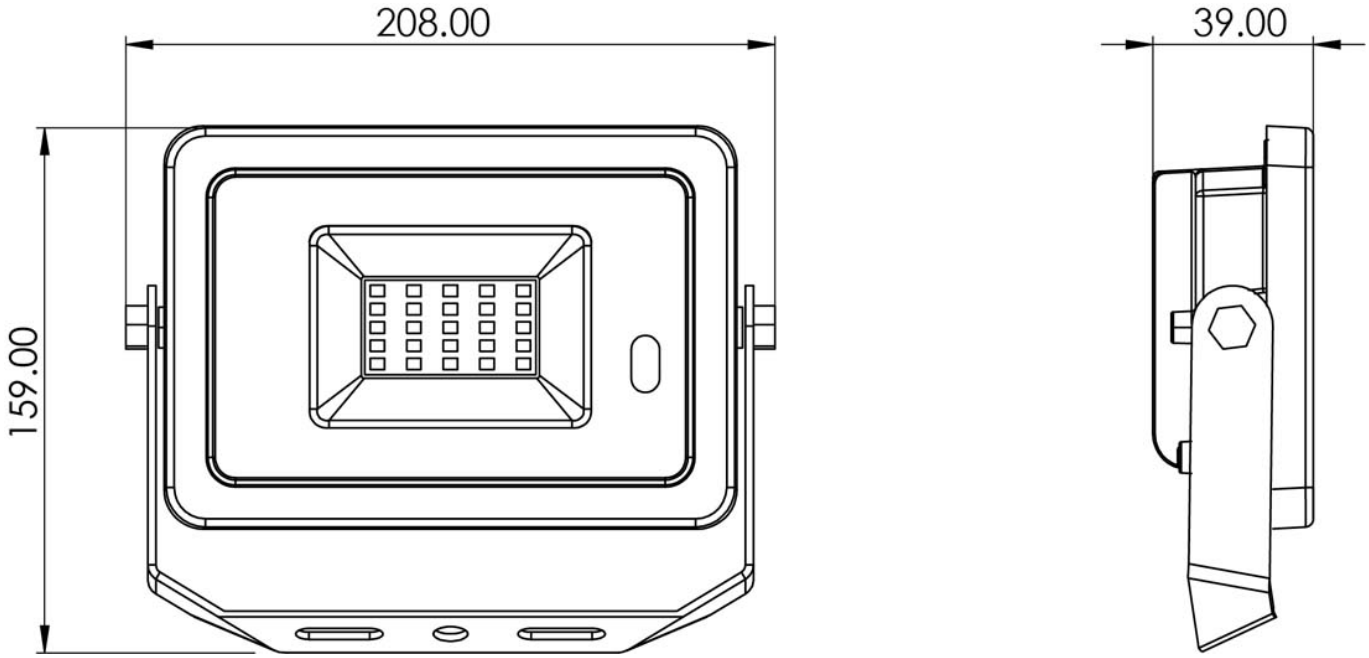

Technical
Stafford Park 12
Telford, Shropshire,
TF3 3BJ

T: +44 (0)1952 292441
E: sales@xciteledlighting.co.uk
W: www.xciteledlighting.co.uk