xcite LED Lighting
Data Sheet

Order Code: XCFC50CTMS

50W - Floodlight with Microwave Sensor - Photocell - CCTK Selector [3000K/4000K/6000K]



Features

- Ideal for retrofit of existing halogen fixtures, lighting buildings, car parks or doorways
- CCT selectable via selector switch [3000K/4000K/6000K]
- Available with high performance PIR
- Available in 4 different outputs
- Available with microwave sensor + photocell only function (via the remote, supplied as standard)
- High quality toughened safety glass
- Supplied with stirrup and 1m of flex for column, bracket or surface fix
- Up to 110 lumens per watt efficacy

Construction

- Die-cast aluminium body finished with black marine grade paint finish
- Weatherproof IP65 construction
- CRI: Ra>80

Technical Data

General

Luminaire Wattage (W)	50
Weight (kg)	1.00
Operating Temperature (ta °C)	-20 to 40

Light Output

Lumens (lm)	5500
Efficacy (lm/W)	110

LED

CCT (K)	3000K/4000K/6000K
CRI	>80
Macadam Elipses	<5

Electrical

Rated Input Current (A)	0.214
Power Factor (pf)	0.9
Input Voltage Range (VAC)	220-240
Terminal Type	3 pole screw down

Technical
Stafford Park 12
Telford, Shropshire,
TF3 3BJ

T: +44 (0)1952 292441
E: sales@xciteledlighting.co.uk
W: www.xciteledlighting.co.uk

xcite LED Lighting

Data Sheet

Order Code: XCFC50CTMS

50W - Floodlight with Microwave Sensor - Photocell - CCTK Selector [3000K/4000K/6000K]

Dimensions

Length (mm)	237
Width (mm)	186
Depth (mm)	39

Line Drawing

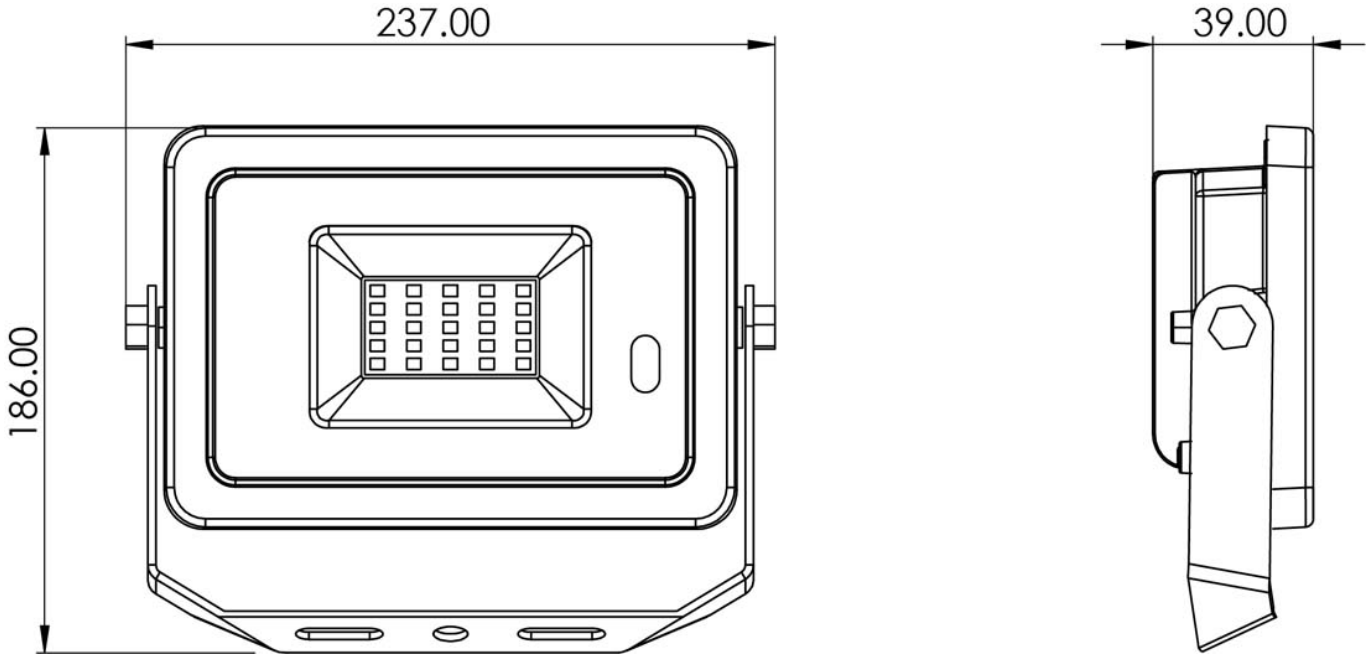

Technical
Stafford Park 12
Telford, Shropshire,
TF3 3BJ

T: +44 (0)1952 292441
E: sales@xciteledlighting.co.uk
W: www.xciteledlighting.co.uk