xcite LED Lighting
Data Sheet

Order Code: XCFRA6CTW10

Xcite FRD 6W recessed fire rated downlight - 3000-6000K - White -10 pack



Features

- Ultra-low profile design perfect for installations in shallow ceiling voids, offering more flexibility in compact spaces.
- CCT selectable via selector switch [3000K/4000K/6000K]
- Dimmable as standard
- 60° Beam Angle
- 30, 60 & 90 minute fire rating with solid timber joists
- 30 minute fire rating with Staircraft I-Joist and METAL WEB Joist [Compatibility Matrix]
- Plaster-in reccessed FRD TRIMLESS FRAME [sold separately]

Construction

- Steel body providing a high level of fire protection in accordance with Building Regulations Part B
- Loop in/out mains connections with easy-fit connector
- CRI: Ra>80
- Thermally-insulating material coverable

Technical Data

General

Luminaire Wattage (W)	6
Weight (kg)	0.10
Operating Temperature (ta °C)	0 to 25

Light Output

Lumens (lm)	650
Efficacy (lm/W)	108

LED

CCT (K)	3000K/4000K/6000K
CRI	80
Macadam Elipses	6

Electrical

Rated Input Current (A)	0.031
Power Factor (pf)	0.8
Input Voltage Range (VAC)	220-240
Surge Protection (kV)	0.5
Conductor Size (mm)	0.5 - 2.5
Terminal Type	3-Pole Grip-wire

Technical
Stafford Park 12
Telford, Shropshire,
TF3 3BJ

T: +44 (0)1952 292441
E: sales@xciteledlighting.co.uk
W: www.xciteledlighting.co.uk

xcite LED Lighting

Data Sheet

Order Code: XCFRA6CTW10

Xcite FRD 6W recessed fire rated downlight - 3000-6000K - White -10 pack

Dimensions

Depth (mm)	44
Cut Out (mm)	60
Dia. (mm)	80

Line Drawing

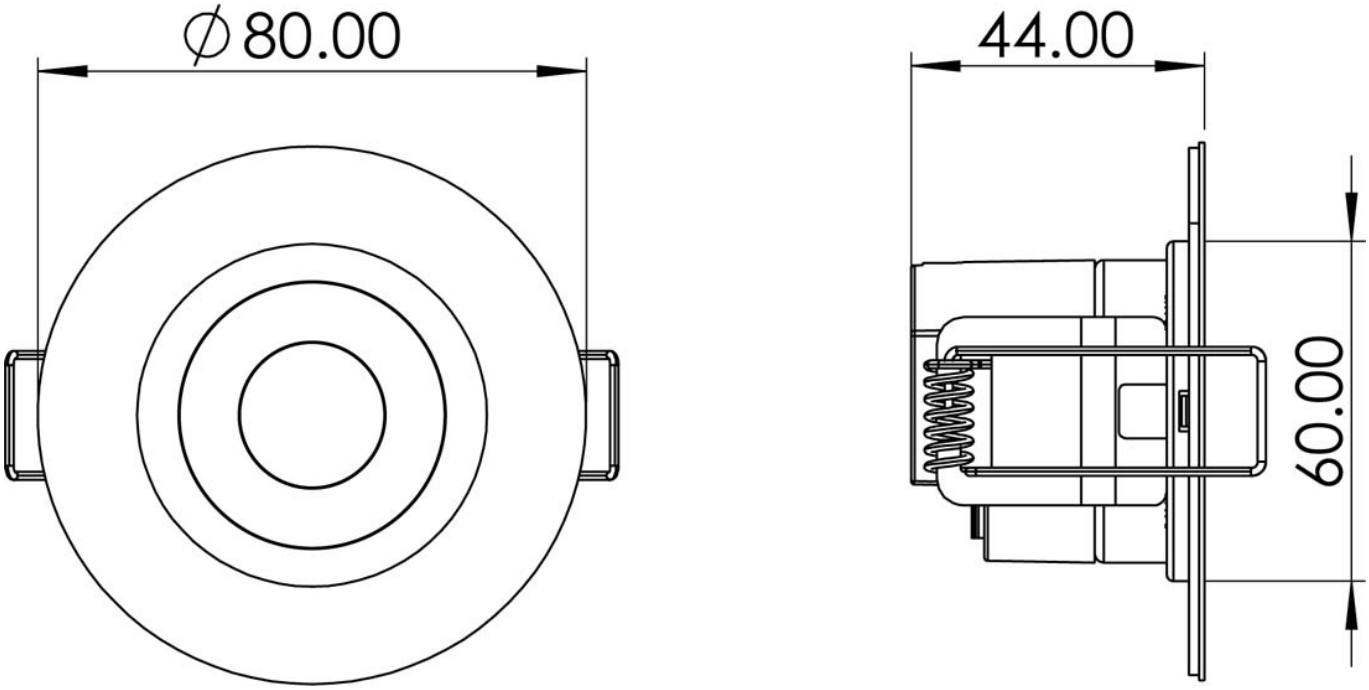

Technical
Stafford Park 12
Telford, Shropshire,
TF3 3BJ

T: +44 (0)1952 292441
E: sales@xciteledlighting.co.uk
W: www.xciteledlighting.co.uk