xcite LED Lighting
Data Sheet

Order Code: XCFRATX1

X1 FRD TILT - CCT [2700K/3000K/4000K/6000K] + Wattage Switchable



Features

- CCT [2700K,3000K,4000K,6000K] adjustable via 4-way selector switch
- Wattage [4W,6W] adjustable via 2-way selector switch
- Dimmable as standard
- Up to 20° tilt adjustment and 360° rotation, for flexible aiming
- Suitable for domestic applications
- Ideal for retrofit of existing halogen downlight fixtures
- 30, 60 & 90 minute fire rating with solid timber joists
- 30 minute fire rating with Staircraft I-Joist and METAL WEB Joist [Compatibility Matrix]

Construction

- Easy accessible CCT and Wattage switches beneath magnetic fix bezel for quick and simple adjustment
- 2-part loop in/out push-fit terminal block for quick installation
- Thermally-insulating material coverable

Installation Notes

Screwless terminals for quick & easy installation

Technical Data

General

Luminaire Wattage (W)	4W/6W
Weight (kg)	0.15
Operating Temperature (ta °C)	5° to 25°

Light Output

Lumens (lm)	340 to 610
Efficacy (lm/W)	93

LED

CCT (K)	2700K/3000K/4000K/6000K
CRI	80
Macadam Elipses	0.8 to 6.9

Driver

Driver Current (mA)	11mA to 17mA
Forward Voltage (V)	250

Electrical

Rated Input Current (A)	0.02 to 0.03
Power Factor (pf)	0.88
Input Voltage Range (VAC)	220 to 240
Inrush Current Peak (A)	160
Surge Protection (kV)	1KV
Conductor Size (mm)	0.5 to 2.5
Terminal Type	3 pole piano key

Technical
Stafford Park 12
Telford, Shropshire,
TF3 3BJ

T: +44 (0)1952 292441
E: sales@xciteledlighting.co.uk
W: www.xciteledlighting.co.uk

xcite LED Lighting

Data Sheet

Order Code: XCFRATX1

X1 FRD TILT - CCT [2700K/3000K/4000K/6000K] + Wattage Switchable

Dimensions

Height (mm)	56
Cut Out (mm)	84
Dia. (mm)	99

Line Drawing

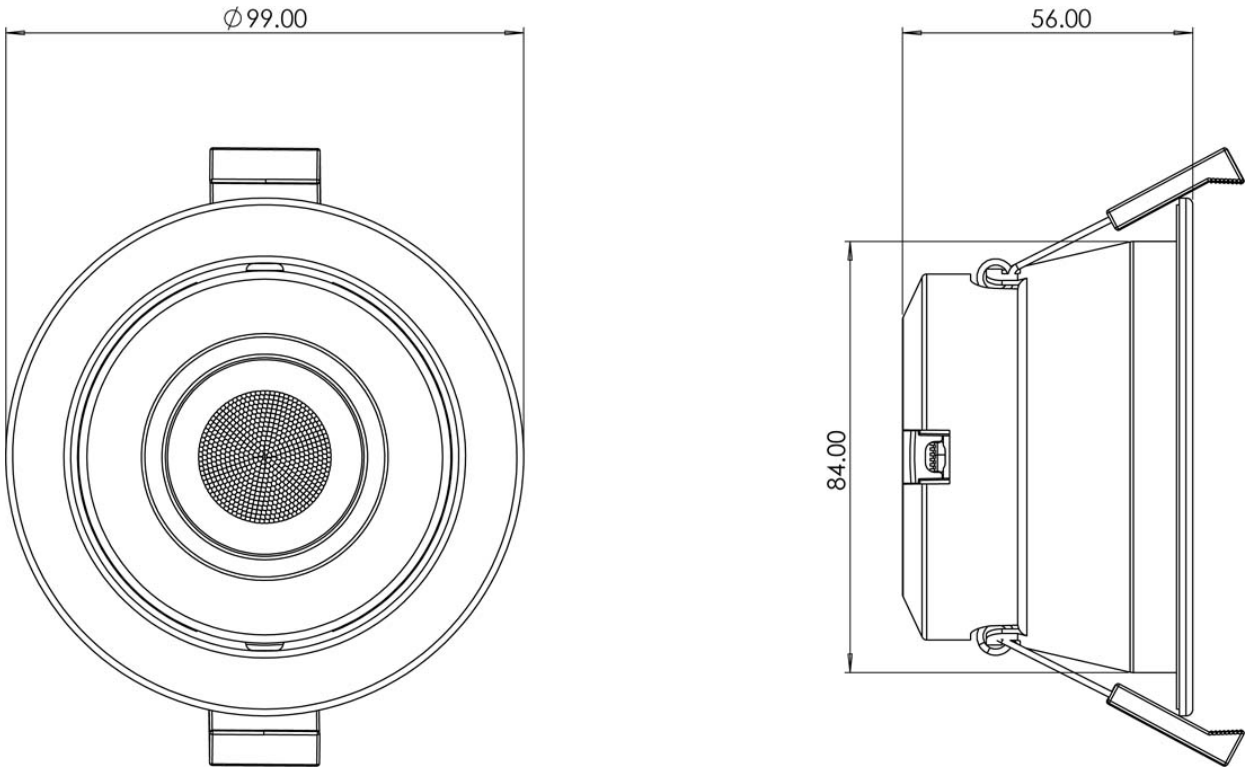

Technical
Stafford Park 12
Telford, Shropshire,
TF3 3BJ

T: +44 (0)1952 292441
E: sales@xciteledlighting.co.uk
W: www.xciteledlighting.co.uk