xcite LED Lighting
Data Sheet

Order Code: XCFRAX1W10

X1 FRD - CCT [2700K/3000K/4000K/6000K] + Wattage Selectable - White - 10 Pack



Features

- Suitable for domestic applications
- Ideal for retrofit of existing halogen downlight fixtures
- Dimmable as standard
- CCT [2700K,3000K,4000K,6000K] adjustable via 4-way selector switch
- Wattage [4W,6W] adjustable via 2-way selector switch
- 30, 60 & 90 minute fire rating with solid timber joists
- 30 minute fire rating with Staircraft I-Joist and METAL WEB Joist [Compatibility Matrix]
- Supplied with white magnetic bezel as standard
- Interchangeable X1 Bezels and X1 Conversion plates [Sold Separately]

Construction

- Easy accessible CCT and Wattage switches beneath magnetic fix bezel for quick and simple adjustment
- 2-part loop in/out push-fit terminal block for quick installation
- Thermally-insulating material coverable

Installation Notes

Screwless terminals for quick & easy installation

Technical Data

General

Luminaire Wattage (W)	4W/6W
Weight (kg)	0.11
Operating Temperature (ta °C)	5° to 25°

Light Output

Lumens (lm)	340 to 610
Efficacy (lm/W)	93

LED

CCT (K)	2700K/3000K/4000K/6000K
CRI	80
Macadam Elipses	0.8 to 6.9

Driver

Driver Current (mA)	11mA to 17mA
Forward Voltage (V)	250

Electrical

Rated Input Current (A)	0.02 to 0.03
Power Factor (pf)	0.88
Input Voltage Range (VAC)	220 to 240
Inrush Current Peak (A)	160
Surge Protection (kV)	1KV
Conductor Size (mm)	0.5 to 2.5
Terminal Type	3 pole piano key

Technical
Stafford Park 12
Telford, Shropshire,
TF3 3BJ

T: +44 (0)1952 292441
E: sales@xciteledlighting.co.uk
W: www.xciteledlighting.co.uk

xcite LED Lighting
Data Sheet

Order Code: XCFRAX1W10

X1 FRD - CCT [2700K/3000K/4000K/6000K] + Wattage Selectable - White - 10 Pack

Dimensions

Depth (mm)	41
Cut Out (mm)	70
Dia. (mm)	85

Line Drawing

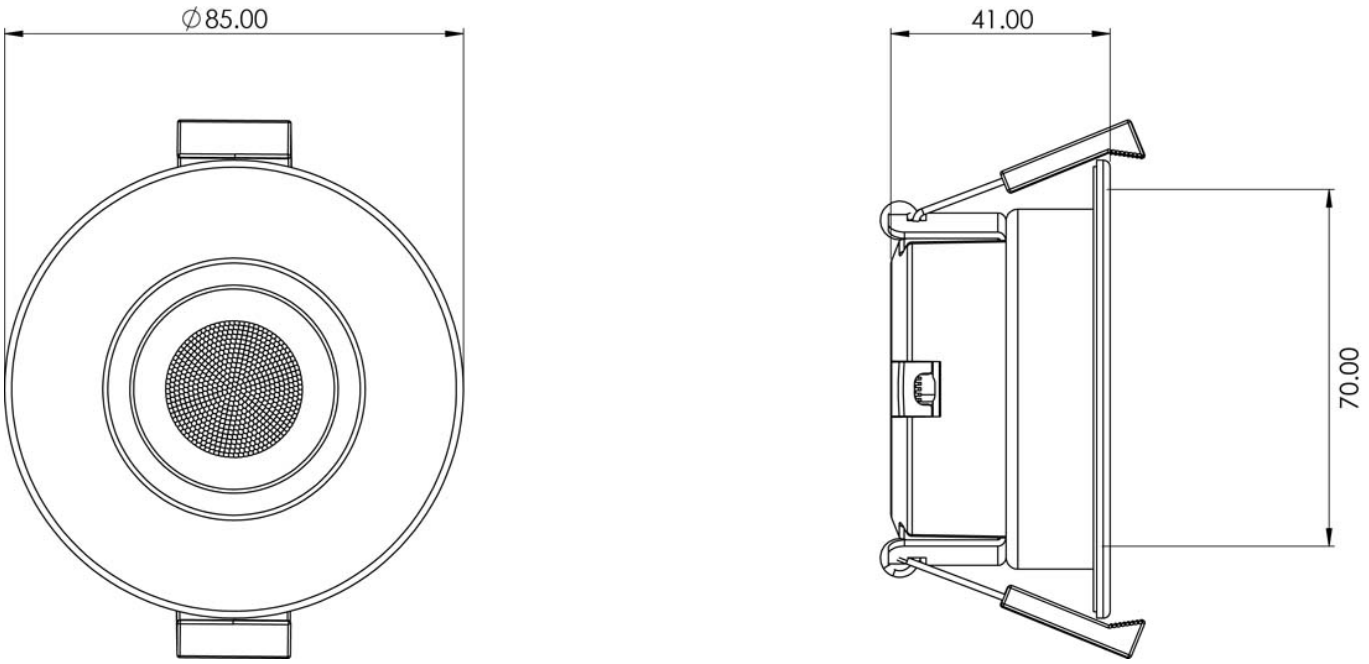

Technical
Stafford Park 12
Telford, Shropshire,
TF3 3BJ

T: +44 (0)1952 292441
E: sales@xciteledlighting.co.uk
W: www.xciteledlighting.co.uk