xcite LED Lighting
Data Sheet

Order Code: XCHBA100NWMS

100W - High Bay - Microwave sensor - 4000K



Features

- Ideal for retro-fit of SON or Metal Halide high bays
- Available in 2 sizes and 3 outputs
- Suspension via chain or wire suspension
- Suitable for mounting heights between 5m and 12m
- Microwave dimming sensor option available

Construction

- Die-cast aluminium body finished in black
- Integral driver
- Supplied as standard with neutral white [4000K] LED



Technical Data

General

Luminaire Wattage (W)	100
Weight (kg)	2.48
Operating Temperature (ta °C)	-20 to 25

Light Output

Lumens (lm)	13000
Efficacy (lm/W)	130

LED

CCT (K)	4000
CRI	80
Macadam Elipses	<3

Driver

Driver Current (mA)	380
Forward Voltage (V)	240

Electrical

Rated Input Current (A)	0.46
Power Factor (pf)	0.95
Input Voltage Range (VAC)	100 - 240
Inrush Current Peak (A)	350
Surge Protection (kV)	6
Conductor Size (mm)	1
Terminal Type	push

Technical
Stafford Park 12
Telford, Shropshire,
TF3 3BJ

T: +44 (0)1952 292441
E: sales@xciteledlighting.co.uk
W: www.xciteledlighting.co.uk

xcite LED Lighting

Data Sheet

Order Code: XCHBA100NWMS

100W - High Bay - Microwave sensor - 4000K

Dimensions

Depth (mm)	140
Dia. (mm)	301

Line Drawing

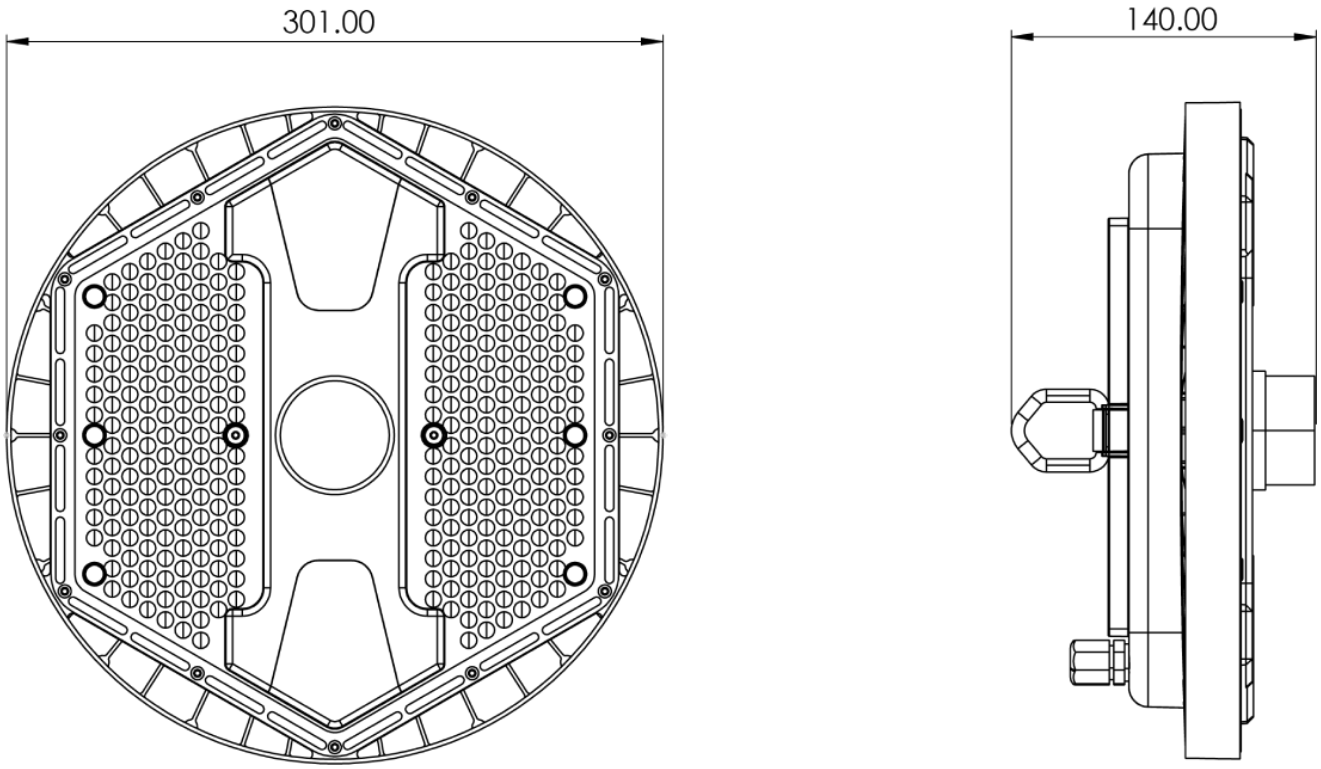

Technical
Stafford Park 12
Telford, Shropshire,
TF3 3BJ

T: +44 (0)1952 292441
E: sales@xciteledlighting.co.uk
W: www.xciteledlighting.co.uk