xcite LED Lighting
Data Sheet

Order Code: XCLA

ES Coach Lantern



Features

- Suitable for doorways and entrance areas

Construction

- Black polycarbonate body
- Clear polycarbonate diffuser
- Neutral white [4000K]

Technical Data

General

Weight (kg)	0.63
Operating Temperature (ta °C)	0 to 25

Electrical

Input Voltage Range (VAC)	220-240V
Conductor Size (mm)	2.5
Terminal Type	SCREW

Technical
Stafford Park 12
Telford, Shropshire,
TF3 3BJ

T: +44 (0)1952 292441
E: sales@xciteledlighting.co.uk
W: www.xciteledlighting.co.uk

Order Code: XCLA

ES Coach Lantern

Dimensions

Length (mm)	214
Height (mm)	368
Depth (mm)	240
Fix	82

Line Drawing

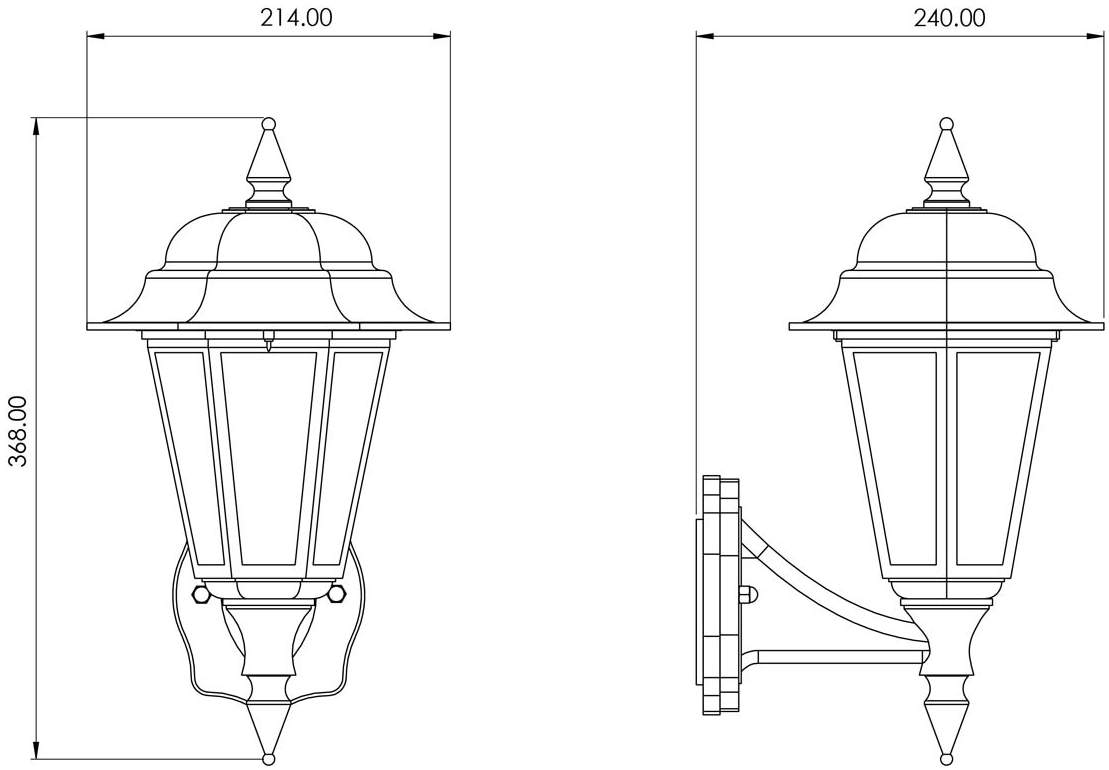

Technical
Stafford Park 12
Telford, Shropshire,
TF3 3BJ

T: +44 (0)1952 292441
E: sales@xciteledlighting.co.uk
W: www.xciteledlighting.co.uk