xcite LED Lighting
Data Sheet

Order Code: XCLA7NW

7W - Coach Lantern - 4000K



Features

- Suitable for doorways and entrance areas

Construction

- Black polycarbonate body
- Clear polycarbonate diffuser
- Neutral white [4000K]

Technical Data

General

Luminaire Wattage (W)	7
Weight (kg)	0.63
Operating Temperature (ta °C)	0 to 25

Light Output

Lumens (lm)	400
Efficacy (lm/W)	57

LED

CCT (K)	4000
CRI	80
Macadam Elipses	4

Driver

Driver Current (mA)	80mA
Forward Voltage (V)	70-86V

Electrical

Power Factor (pf)	0.5
Input Voltage Range (VAC)	220-240V
Inrush Current Peak (A)	15
Surge Protection (kV)	0.5kV
Conductor Size (mm)	2.5
Terminal Type	SCREW

Technical
Stafford Park 12
Telford, Shropshire,
TF3 3BJ

T: +44 (0)1952 292441
E: sales@xciteledlighting.co.uk
W: www.xciteledlighting.co.uk

xcite LED Lighting
Data Sheet

Order Code: XCLA7NW

7W - Coach Lantern - 4000K

Dimensions

Length (mm)	214
Height (mm)	368
Depth (mm)	240
Fix	82

Line Drawing

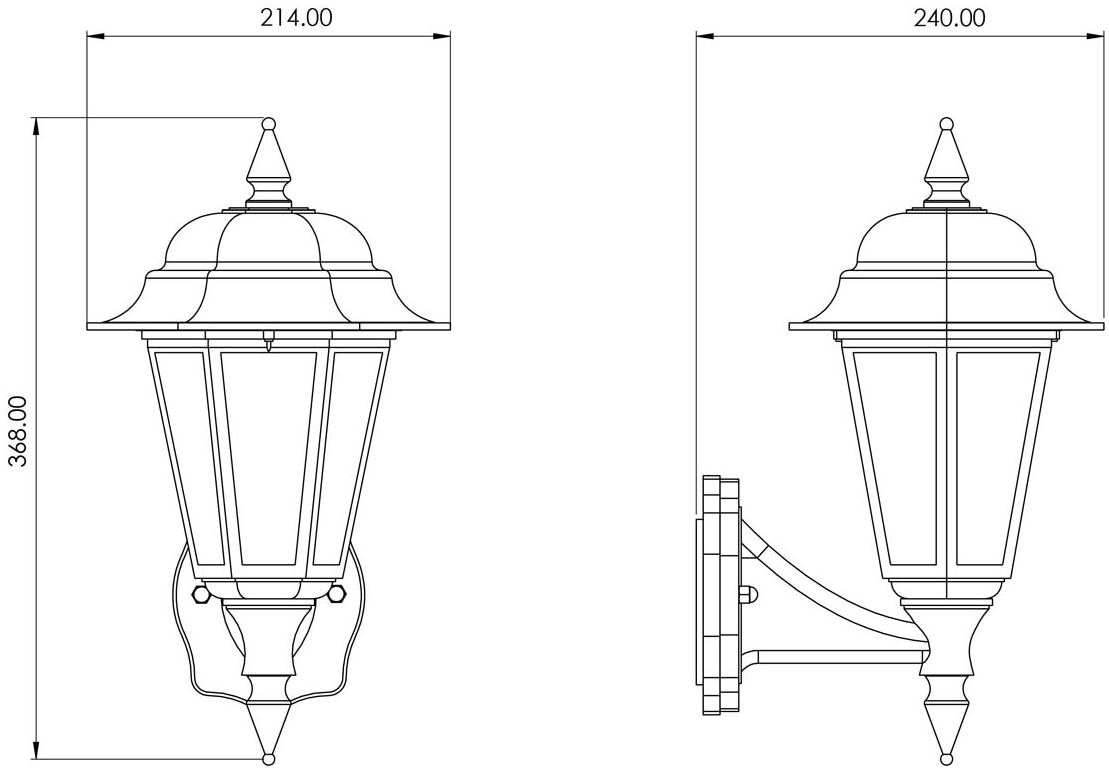

Technical
Stafford Park 12
Telford, Shropshire,
TF3 3BJ

T: +44 (0)1952 292441
E: sales@xciteledlighting.co.uk
W: www.xciteledlighting.co.uk