xcite LED Lighting
Data Sheet

Order Code: XCMWX1

X1 MIDI WALL XCMW - 3000K-6000K + Wattage Selectable - Fixed output

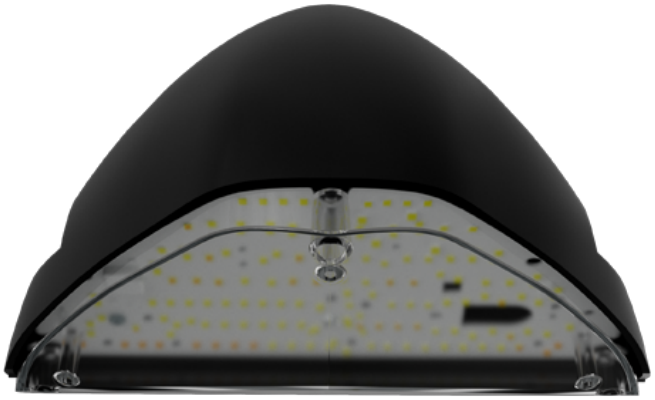

Features

- **Switchable CCT**
  Enables the required colour temperature to be selected to suit the desired lighting environment.
- **Selectable Wattage**
  Enables the required light output to be selected to suit the application
- **Up to 146 lm/W**
  Delivers high performance illumination while helping to reduce energy consumption.

Construction

- **IP65**
  Protects against dust and water ingress for reliable performance in demanding environments
- **IK10**
  Provides excellent resistance to impact, helping to maintain long term performance
- **Cast Aluminium Construction**
  Provides a robust, durable housing for long term reliability
- **Side & Rear Cable Entry**
  Provides flexible cable entry options to suit a wide range of installation requirements.

Technical Data

General

Luminaire Wattage (W)	7 / 9 / 11 / 13
Weight (kg)	1.17
Operating Temperature (ta °C)	0° to 25°

Light Output

Lumens (lm)	1050/1327/1564/1813
Efficacy (lm/W)	146

LED

CRI	82 to 86
Macadam Elipses	1.5 to 7.5

Driver

Driver Current (mA)	200 / 250 / 300 / 350
Forward Voltage (V)	29.5 to 31.3Vdc

Electrical

Rated Input Current (A)	0.04 / 0.04 / 0.05 / 0.06
Power Factor (pf)	0.9 to 0.96
Input Voltage Range (VAC)	220 to 240
Inrush Current Peak (A)	10A
Surge Protection (kV)	1kV
Conductor Size (mm)	0.5 to 2.5
Terminal Type	3 pole piano key

Technical
Stafford Park 12
Telford, Shropshire,
TF3 3BJ

T: +44 (0)1952 292441
E: sales@xciteledlighting.co.uk
W: www.xciteledlighting.co.uk

Order Code: XCMWX1

X1 MIDI WALL XCMW - 3000K-6000K + Wattage Selectable - Fixed output

Dimensions

Length (mm)	137
Width (mm)	260
Height (mm)	214

Line Drawing

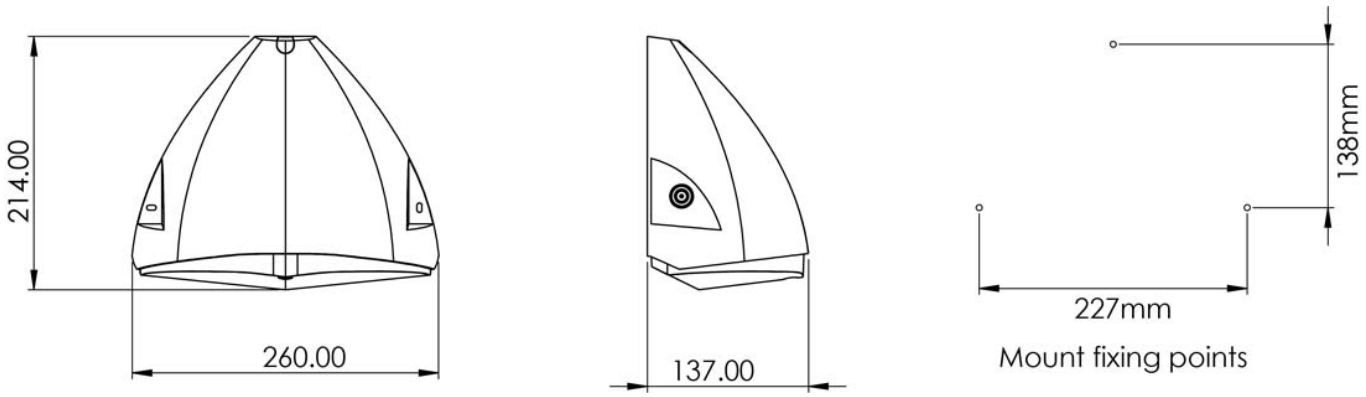

Technical
Stafford Park 12
Telford, Shropshire,
TF3 3BJ

T: +44 (0)1952 292441
E: sales@xciteledlighting.co.uk
W: www.xciteledlighting.co.uk