xcite LED Lighting
Data Sheet

Order Code: XCPC

Photocell Head and Bracket



Features

- Suitable for switching exterior lighting circuits
- Wall mounted
- Two-piece unit with NEMA socket base and head unit [Head unit can be ordered as separate item]
- 10A Rating
- Load rating: Max 2000W [10A] incandescent, Max 2 x 400W [10A] HPS. Max 600W [2.2A] LED

Construction

- Low energy and maintenance free solution
- High quality polycarbonate construction

50,000 HOURS | 3YRS WARRANTY | IP44 | IK07

Technical Data

General

Operating Temperature (ta °C)	-20 to 40

Electrical

Conductor Size (mm)	0.5 to 2.5
Terminal Type	Screw terminals

Technical
Stafford Park 12
Telford, Shropshire,
TF3 3BJ

T: +44 (0)1952 292441
E: sales@xciteledlighting.co.uk
W: www.xciteledlighting.co.uk

Order Code: XCPC

Photocell Head and Bracket

Dimensions

Length (mm)	80
Width (mm)	80
Depth (mm)	133

Line Drawing

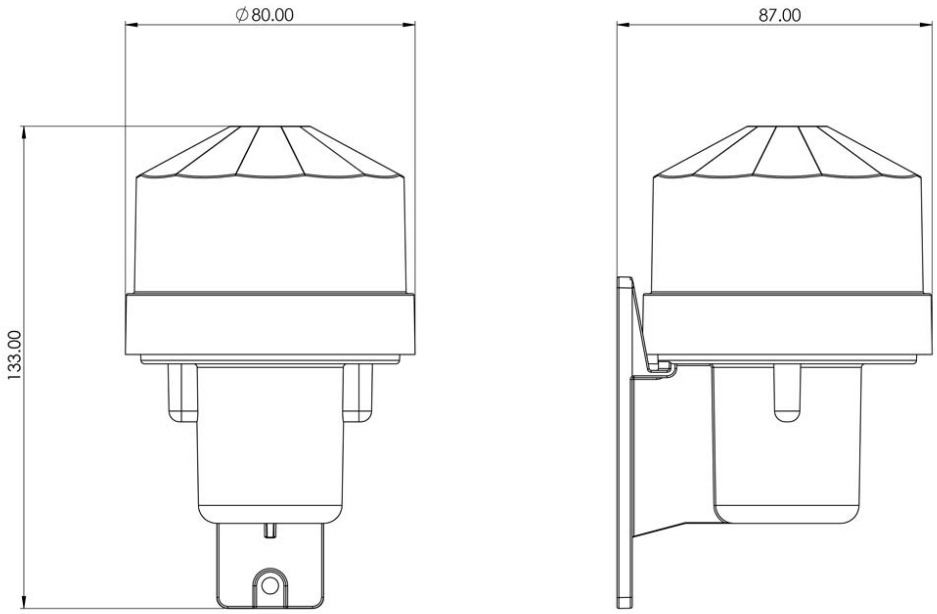

Technical
Stafford Park 12
Telford, Shropshire,
TF3 3BJ

T: +44 (0)1952 292441
E: sales@xciteledlighting.co.uk
W: www.xciteledlighting.co.uk