xcite LED Lighting
Data Sheet

Order Code: XCSC40NW

40W - Scoop Adjustable Downlight - 4000K



Features

- Suitable for retail and display areas
- Fully adjustable up to 350° rotation and 45° tilt
- Supplied with polished aluminium reflector - 35º beam angle
- Up to 100 lumens per watt efficacy

Construction

- Die-cast aluminium body finished in white
- Remote driver
- Supplied as standard with neutral white [4000K] LED

4000K | 50,000 HOURS | 3YRS WARRANTY | IP20 | IK02

Technical Data

General

Luminaire Wattage (W)	40
Weight (kg)	1.14
Operating Temperature (ta °C)	-10 to 40

Light Output

Lumens (lm)	4000
Efficacy (lm/W)	100

LED

CCT (K)	4000
CRI	80
Macadam Elipses	4

Driver

Driver Current (mA)	950
Forward Voltage (V)	24 - 42

Electrical

Rated Input Current (A)	0.27
Power Factor (pf)	0.9
Input Voltage Range (VAC)	220 - 240
Inrush Current Peak (A)	24.9
Surge Protection (kV)	1
Conductor Size (mm)	1.5
Terminal Type	2-pole screw down

Technical
Stafford Park 12
Telford, Shropshire,
TF3 3BJ

T: +44 (0)1952 292441
E: sales@xciteledlighting.co.uk
W: www.xciteledlighting.co.uk

xcite LED Lighting
Data Sheet

Order Code: XCSC40NW

40W - Scoop Adjustable Downlight - 4000K

Dimensions

Depth (mm)	145
Cut Out (mm)	155
Dia. (mm)	163

Line Drawing

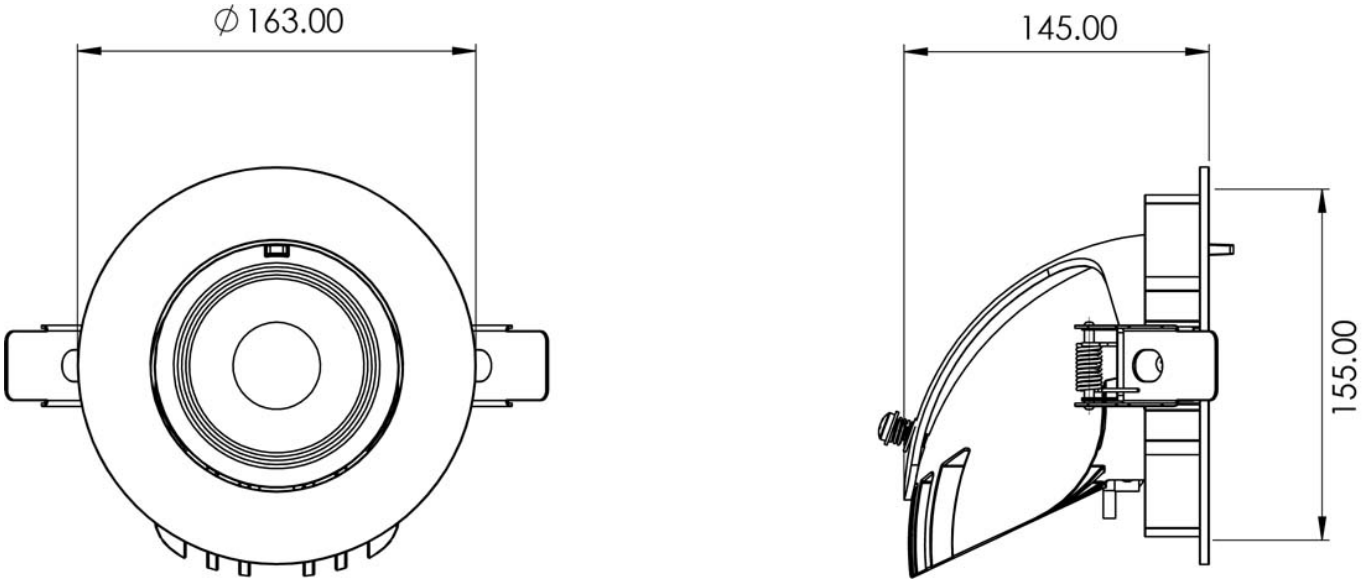

Technical
Stafford Park 12
Telford, Shropshire,
TF3 3BJ

T: +44 (0)1952 292441
E: sales@xciteledlighting.co.uk
W: www.xciteledlighting.co.uk