xcite LED Lighting
Data Sheet

Order Code: XCSEBAM3ST

XCITE EXIT BOX S ST 2W - 6500K - Fixed output - Emergency Self-test



Features

- Suitable for escape routes and exits
- Rear BESA fix and 3 additional rear fixing points
- Reduced maintenance and high performance
- Only 30mm depth for modern, slimline appearance
- Dual LED array for internal illumination and downward distribution
- Supplied with LiFePO4 battery

Construction

- Plastic body
- Hinged front lid for easy installation
- Supplied with universal EURO running man legend
- Integral auto self-test for reduced maintenance, includes a disable function

6500K | 50,000 HOURS | 3YRS WARRANTY | IP20 | IK07 | M3 | LiFePO4

Technical Data

General

Luminaire Wattage (W)	2
Weight (kg)	0.65
Operating Temperature (ta °C)	5° to 25°

Driver

Driver Current (mA)	172
Forward Voltage (V)	3.37

Electrical

Rated Input Current (A)	0.04
Power Factor (pf)	0.18
Input Voltage Range (VAC)	220 to 240
Conductor Size (mm)	1.5
Terminal Type	4 pole screw down

Technical
Stafford Park 12
Telford, Shropshire,
TF3 3BJ

T: +44 (0)1952 292441
E: sales@xciteledlighting.co.uk
W: www.xciteledlighting.co.uk

xcite LED Lighting

Data Sheet

Order Code: XCSEBAM3ST

XCITE EXIT BOX S ST 2W - 6500K - Fixed output - Emergency Self-test

Dimensions

Length (mm)	325
Width (mm)	185
Depth (mm)	30

Line Drawing

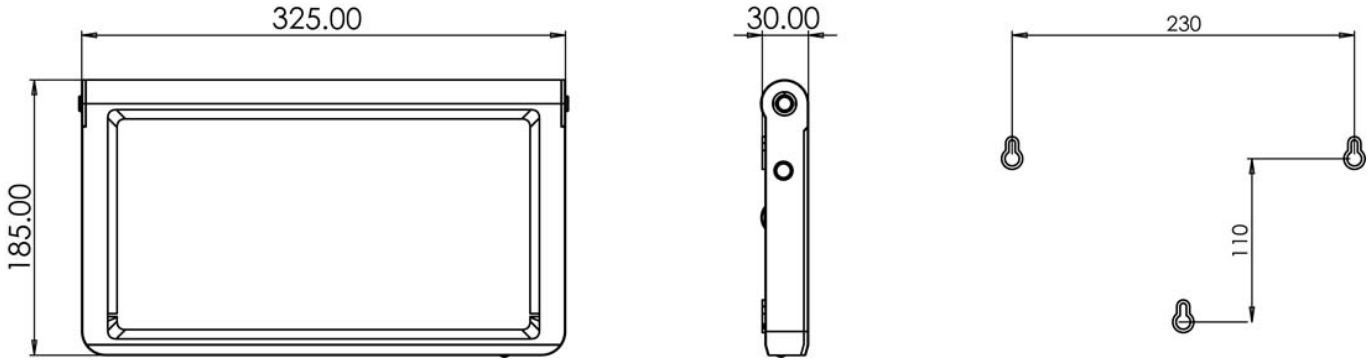

Technical
Stafford Park 12
Telford, Shropshire,
TF3 3BJ

T: +44 (0)1952 292441
E: sales@xciteledlighting.co.uk
W: www.xciteledlighting.co.uk