xcite LED Lighting
Data Sheet

Order Code: XCSF10NW

10W - High Output Slim Floodlight - IP65 - 4000K - Black



Features

- Ideal for retrofit of existing halogen fixtures, lighting buildings, car parks or doorways
- Available with Photocell [50W & 80W outputs]
- Available with PIR [Up to 50W]
- Available in 6 sizes
- Available in 8 different outputs
- High quality toughened safety glass
- Supplied with stirrup and 1m of flex for column, bracket or surface fix
- Weatherproof IP65 construction
- Up to 80 lumens per watt efficacy

Construction

- White or black body finish
- Breather gland for reducing condensation

Technical Data

General

Luminaire Wattage (W)	10
Weight (kg)	0.46
Operating Temperature (ta °C)	-20 to 25

Light Output

Lumens (lm)	800
Efficacy (lm/W)	80

LED

CCT (K)	4000
CRI	65
Macadam Elipses	4

Electrical

Rated Input Current (A)	0.045
Power Factor (pf)	0.8
Input Voltage Range (VAC)	100-240
Inrush Current Peak (A)	30
Surge Protection (kV)	0.5
Conductor Size (mm)	1.5
Terminal Type	3 pole screw down

Technical
Stafford Park 12
Telford, Shropshire,
TF3 3BJ

T: +44 (0)1952 292441
E: sales@xciteledlighting.co.uk
W: www.xciteledlighting.co.uk

xcite LED Lighting

Data Sheet

Order Code: XCSF10NW

10W - High Output Slim Floodlight - IP65 - 4000K - Black

Dimensions

Length (mm)	153
Width (mm)	110
Depth (mm)	40

Line Drawing

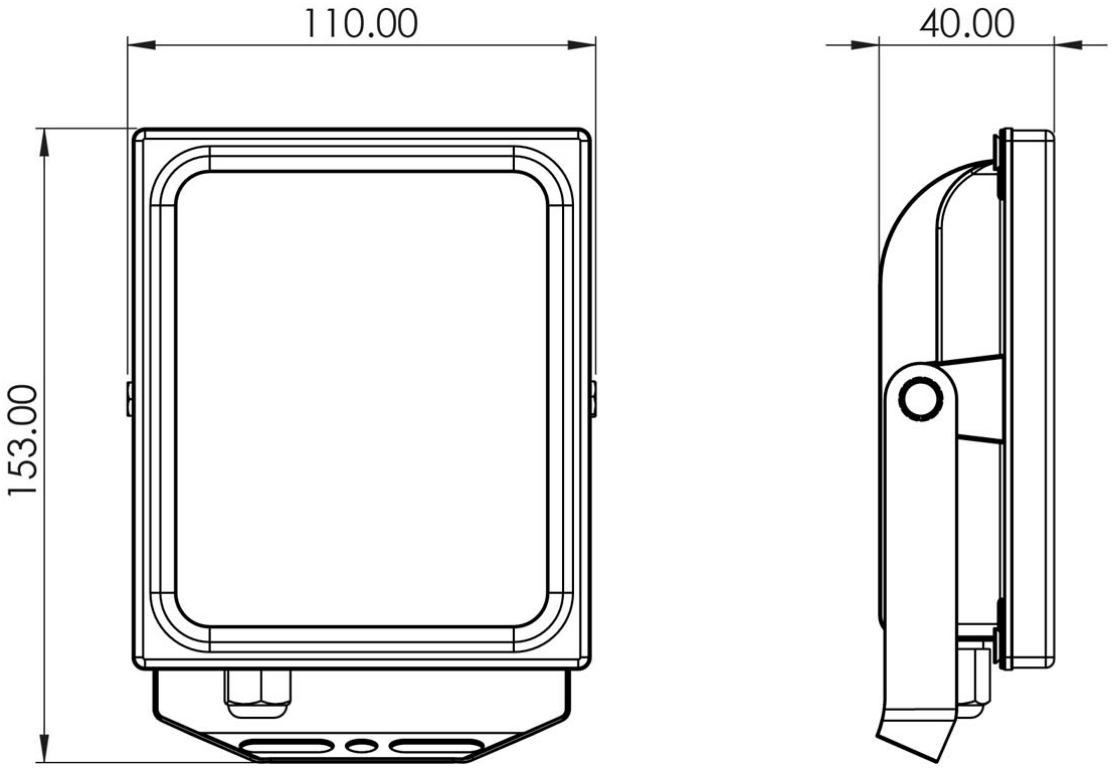

Technical
Stafford Park 12
Telford, Shropshire,
TF3 3BJ

T: +44 (0)1952 292441
E: sales@xciteledlighting.co.uk
W: www.xciteledlighting.co.uk