xcite LED Lighting
Data Sheet

Order Code: XCWL23CT

23W - Wallpack CC - IP65 - CCTK Selector [3000K/4000K/6000K]



Features

- Ideal for retrofit of HID discharge wallpacks
- Suitable for exterior walls and entrance areas
- CCT selectable via 2-way dip switch [3000K/4000K/6000K]
- Sensor options available
- Up to 70 lumens per watt efficacy

Construction

- Polycarbonate body and diffuser
- Integral emergency option available
- CRI: Ra>80

3000K 4000K 6000K | 50,000 HOURS | 5YRS WARRANTY | ONSITE 1 YR WARRANTY | IP65 | IK08 | M3

Technical Data

General

Luminaire Wattage (W)	23
Weight (kg)	1.40
Operating Temperature (ta °C)	0 to 25

Light Output

Lumens (lm)	1600 to 1900
Efficacy (lm/W)	70

LED

CCT (K)	3000K/4000K/6000K
CRI	>80
Macadam Elipses	4

Driver

Driver Current (mA)	700
Forward Voltage (V)	25.2-30.6

Electrical

Rated Input Current (A)	0.12
Power Factor (pf)	0.9
Input Voltage Range (VAC)	220-240
Inrush Current Peak (A)	10
Surge Protection (kV)	1
Conductor Size (mm)	2.5
Terminal Type	3 pole piano key

Technical
Stafford Park 12
Telford, Shropshire,
TF3 3BJ

T: +44 (0)1952 292441
E: sales@xciteledlighting.co.uk
W: www.xciteledlighting.co.uk

xcite LED Lighting
Data Sheet

Order Code: XCWL23CT

23W - Wallpack CC - IP65 - CCTK Selector [3000K/4000K/6000K]

Dimensions

Length (mm)	257
Height (mm)	307
Depth (mm)	105

Line Drawing

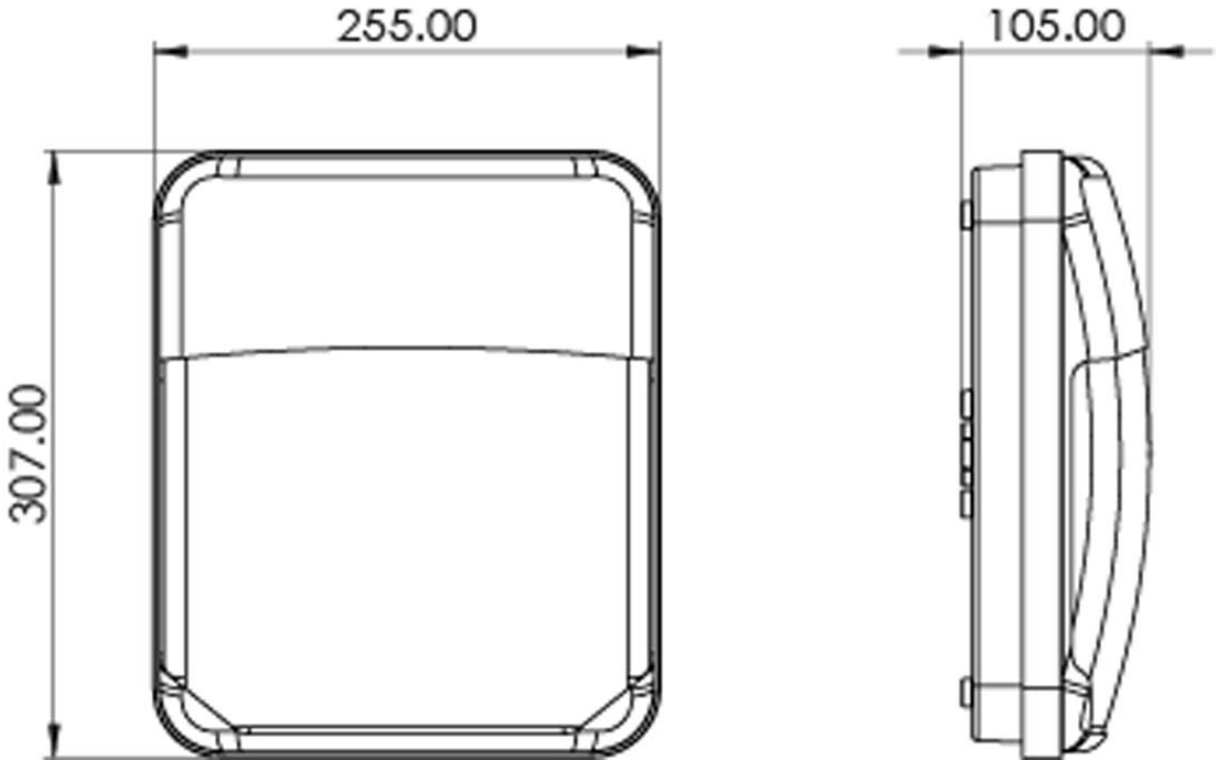

Technical
Stafford Park 12
Telford, Shropshire,
TF3 3BJ

T: +44 (0)1952 292441
E: sales@xciteledlighting.co.uk
W: www.xciteledlighting.co.uk