# xcite LED Lighting
## Data Sheet

**Order Code:** XCWL23CTM3

23W - Wallpack CC - IP65 - CCTK Selector [3000K/4000K/6000K] - 3hrs Maintained Emergency



### Features

- Ideal for retrofit of HID discharge wallpacks
- Suitable for exterior walls and entrance areas
- CCT selectable via 2-way dip switch [3000K/4000K/6000K]
- Sensor options available
- Up to 70 lumens per watt efficacy

### Construction

- Polycarbonate body and diffuser
- Integral emergency option available
- CRI: Ra>80

3000K 4000K 6000K | 50,000 HOURS | 5YRS WARRANTY | ONSITE 1 YR WARRANTY | IP65 | IK08 | M3

## Technical Data

### General

| | |
|---|---|
| Luminaire Wattage (W) | 23 |
| Weight (kg) | 2.00 |
| Operating Temperature (ta °C) | 5 to 25 |

### Light Output

| | |
|---|---|
| Lumens (lm) | 1600 to 1900 |
| Efficacy (lm/W) | 70 |

### LED

| | |
|---|---|
| CCT (K) | 3000K/4000K/6000K |
| CRI | >80 |
| Macadam Elipses | 4 |

### Driver

| | |
|---|---|
| Driver Current (mA) | 700 |
| Forward Voltage (V) | 25.2-30.6 |

### Emergency

| | |
|---|---|
| Emergency Lumen Operating | 150 |
| Emergency Wattage (W) | 2 |

### Electrical

| | |
|---|---|
| Rated Input Current (A) | 0.12 |
| Power Factor (pf) | 0.9 |
| Input Voltage Range (VAC) | 220-240 |
| Inrush Current Peak (A) | 10 |
| Surge Protection (kV) | 1 |
| Conductor Size (mm) | 2.5 |
| Terminal Type | 4 pole piano key |

Technical
Stafford Park 12
Telford, Shropshire,
TF3 3BJ

T: +44 (0)1952 292441
E: sales@xciteledlighting.co.uk
W: www.xciteledlighting.co.uk

Generated on: 28/11/2026 3:56am
Produced by xcite LED Lighting

# xcite LED Lighting
## Data Sheet

**Order Code:** XCWL23CTM3

23W - Wallpack CC - IP65 - CCTK Selector [3000K/4000K/6000K] - 3hrs Maintained Emergency

### Dimensions

| | |
|---|---|
| Length (mm) | 257 |
| Height (mm) | 307 |
| Depth (mm) | 105 |

### Line Drawing

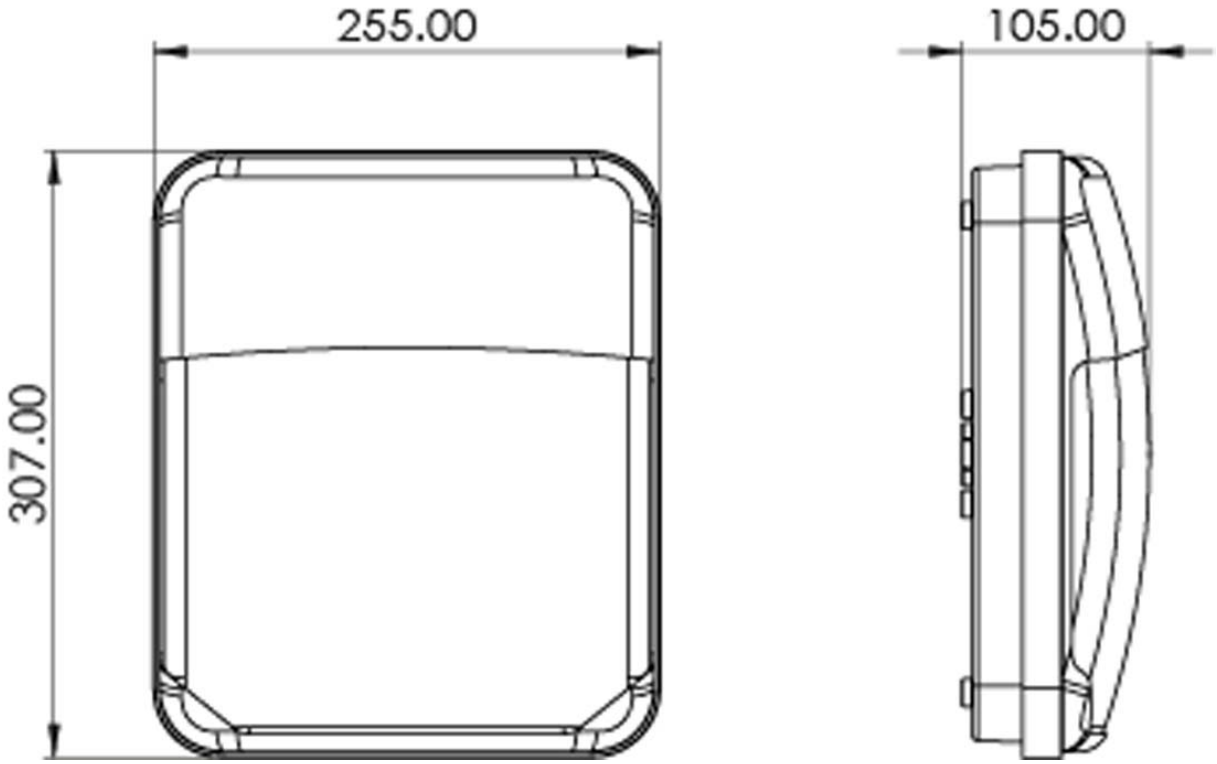


Technical
Stafford Park 12
Telford, Shropshire,
TF3 3BJ

T: +44 (0)1952 292441
E: sales@xciteledlighting.co.uk
W: www.xciteledlighting.co.uk